THOMSON 28WS23U

nicam television set 16/9 format

Chassis code ICC17
28 inches
BLACK DIVA screen
SF-H tube
Mask INVAR
BLACK MATRIX processing
Navilight
Stereo sound
NICAM 2 x 20 W
Built-in teletext
Standard : PAL / SECAM
NTSC via SCART connector
Norms : PanEuro-LL'BGIDKK'

image
sound
special features
connectors / general remarks

image

SF-H 28 inches tube - 16/9 format
BLACK DIVA screen
Mask INVAR
BLACK MATRIX processing for optimal contrast
S-VHS
Zoom function : adapts 4/3 transmissions to 16/9 format
Total tube size : 28 inches diagonal
Picture size : 26 inches diagonal
Standard : PAL / SECAM / NTSC via Vidéo connector
Norms : Pan-Euro LL'BGIDKK'
Videotext / Fastext / Toptext : 6 pages

sound

Stereo sound NICAM L/BG(DKK')/I
Power : 2 x 20W music
4 speakers medium
Virtual Dolby / Spatial / Pseudo effects
Multi-lingual menu (14 languages)

special features

Automatically switches to standby mode
when no signal is present after 5 minutes
Child lock
Display of channel number
Hotel mode
Navilight system
Memorize up to 99 channels + 3 AV channel
AUTO PROGRAMMING
Frequency synthesis tuner
Compatible with cable networks
8 MHz hyperband
RCT100 remote control

connectors / general remarks

1 antenna connector
Front or Side : Headphone jack (6,35 mm)
2 AUDIO in / 1 CVBS in / S-VIDEO in cinches
Rear : 2 SCARTS connector S-VHS compatible
Power supply : 220 - 240 V; 50/60 Hz
Consumption : 100 W/h - in stand-by mode < 1 W/h
Weight : 37 kg
Dimensions (W x H x D) : 713 x 485 x 491 mm
Optional stand : STTH2830

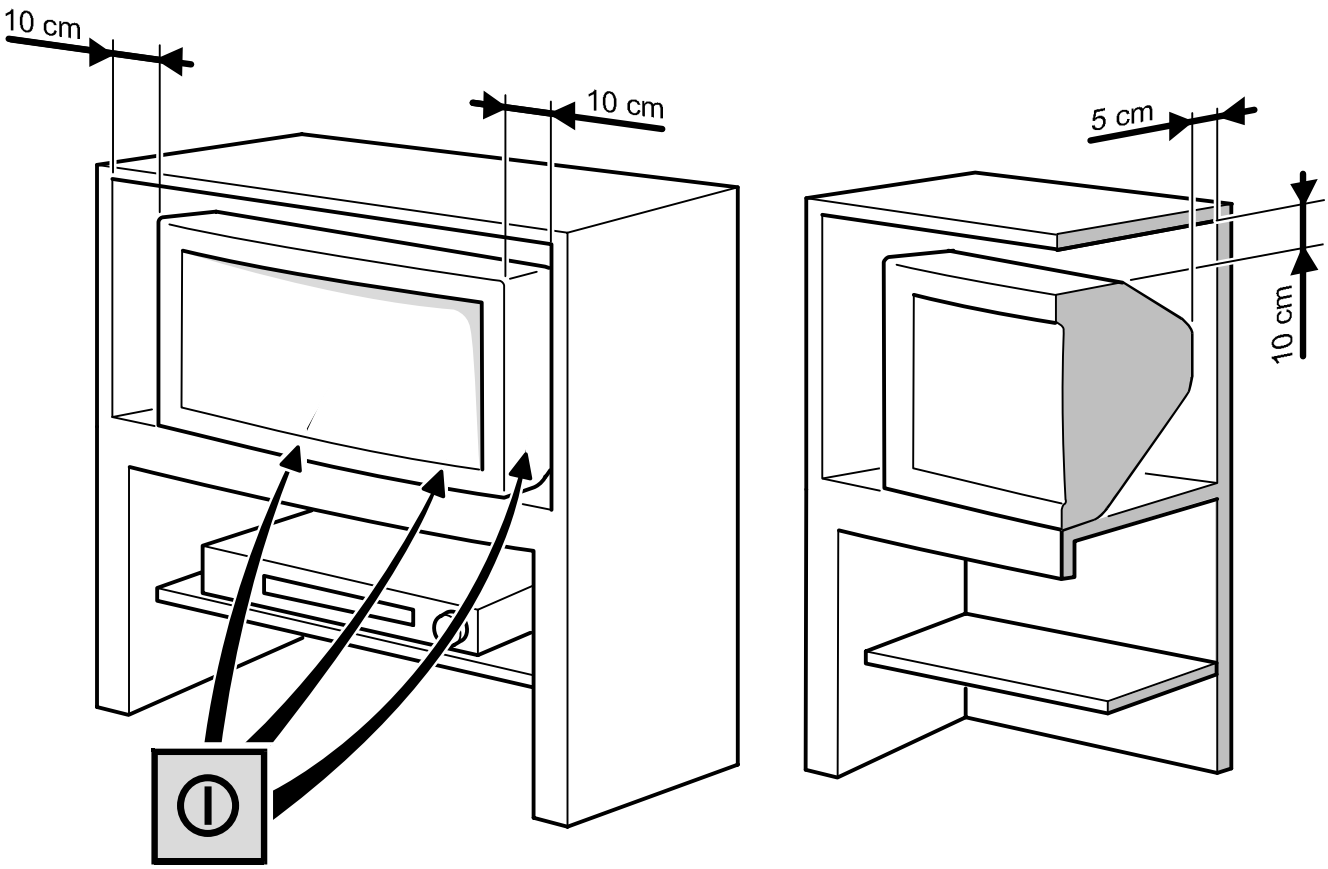
10 cm
10 cm
5 cm
10 cm

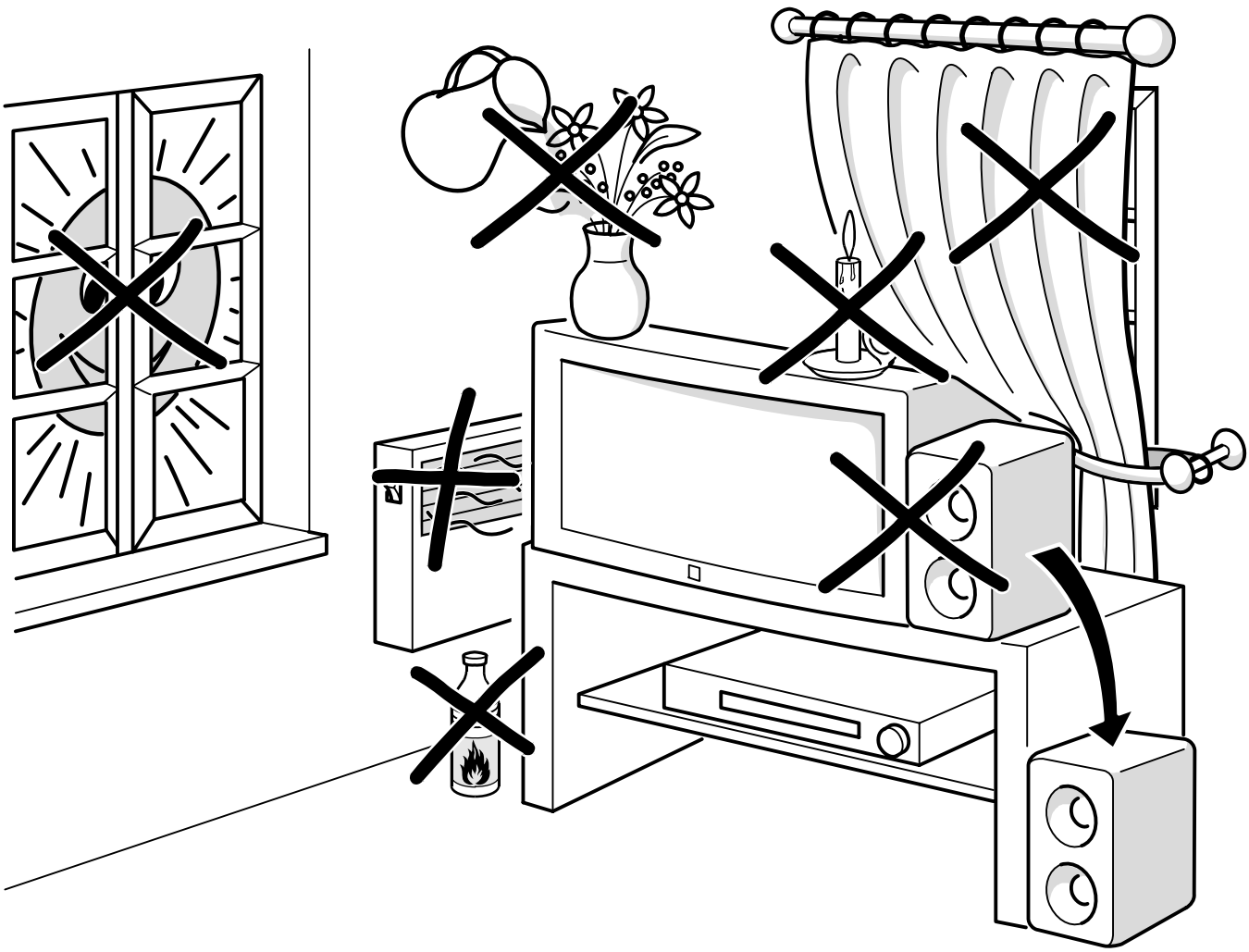

About this manual

This document is common to several television models. Therefore, certain functions or settings may not apply to the model you have purchased

About the switch

The position of the ON/OFF switch ⏻ differs depending on the model. It may be located on the front or on the right-hand side of your set (see the drawing inside the cover page of your manual).

GB

About safety

To ensure your own safety and safe operation of the equipment, observe the following instructions thoroughly.

TV sets require sufficient ventilation to prevent their components from overheating, which will cause failure. Do not block the ventilation openings at the rear. If you place your TV set in a special piece of furniture, make sure there is enough space for unhindered air circulation. Do not place the TV set in the close vicinity of a heater.
The TV set has been designed for use in dry rooms. Should you use it, in exceptional circumstances in the open air (example: on the balcony, in the veranda or tent), you must absolutely protect it against moisture (dew, rain, splash water). Before switching on a cold TV set in a warm room, you should wait until any condensation in the screen has dried by itself.
Maximum ambient temperature: 35°C
Maximum humidity: 85%
By the end of your TV evening or when away from home for a longer period, we recommend that you turn off the TV set with the On/Off-switch.
Even when the On/Off-switch is in the Off-position, your TV set is not fully disconnected from the mains. To disconnect the set completely, the mains plug must be pulled out.
The mains plug must be easily accessible.
In the following cases, we recommend that you pull out the mains connector:
1. During a thunderstorm. In such a case, it is advisable that you also disconnect the TV set from the aerial socket.
2. When odour or smoke emanates from the set.
Never attempt to open your TV set yourself.
Further information:
The TV set shielding is sufficient to prevent X-radiation to the exterior.
Any operation performed by a non skilled person, change of high voltage or replacement of the picture tube by a model not complying with the manufacturer specification are likely to cause considerable increase in X-radiation.
A TV set modified in such a way no longer complies with the manufacturers' specification and must not be used.

About cleaning

The screen is to be cleaned with liquid glass cleaners.
• Never use abrasive products.
• Clean the cabinet with a soft cloth soaked with neutral cleaner. Do not use solvents, such as white spirit or alcohol-based cleaning products since they may damage your television.
• At regular intervals, clean the ventilation grids at the rear of the TV set.

About degaussing

The terrestrial magnetic field may have an influence on your TV set. This influence is revealed by the coloured spots, which appear on the screen.
Should this be the case:
• Turn the equipment off by means of the On/Off-switch.
• Wait about one hour before switching the set on again.
This procedure performs automatic degaussing of the screen. Should there still be coloured spots on the screen, repeat the operation.

Contents

GB

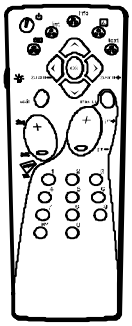

Using the remote control and fitting the batteries.

Page 4

How to call up a menu and how to select a function, a setting or an option.

Page 5

Installation

About this manual 1
About the switch 1
About safety 1
About cleaning 1
About degaussing 1

Basic connections 3

Remote control 4

Navigation principles 5

Calling up the INSTALLATION MAIN MENU 5
Calling up the SUMMARY 5
Calling up a Menu 5
Navigating within the Menus 5

Installing your television for the first time 6

Automatic installation 7

Programme organisation 8

Manual programming 9

Personal settings 10

Preferences 11

Instructions for Use

Daily viewing 12

Picture Adjustment 12
Sound Settings 12
Time 13
List of Channels 14
Selecting Programmes 15
Scrolling the Programmes 15
Audio-visual (AV) Programmes 15
Volume Control 15
Muting the Sound 15
Zoom (16/9 models only) 15
Displaying Information 15
Television Lock 15
Switching Off the Television 15

Teletext 16

Standard Functions 16

Other Connections 17

Other Possibilities 17
Connecting a HiFi or AV amplifier 17

C17/ BASIC / 4000 / GB-TBA / 16.3 / B

Basic connections

The mains plug (1) supplies power to the television. The television must only be plugged in to a 220-240 V - 50 Hz power supply. It must never be plugged in to a DC source. If the plug comes away from the lead, never attempt to plug it in: this could cause electrocution.

The aerial socket (2), located on the rear of the television, can be used to connect an external aerial or other appliance equipped with a modulator such as a VCR, satellite receiver, etc.

If you connect an appliance to the aerial jack, you must give it a channel number. To do this, switch on the appliance, then use the television to find the modulator channel (see the appliance manual). Now give it a programme number and memorise it (see Manual Programming of channels). Then, when you wish to use the appliance, simply select its programme number on the television. This procedure is not required for VCR's not equipped with a modulator.

The SCART socket AV1 (3), located on the rear of the television, is intended to connect a VCR or a camcorder (VHS, 8 mm), a Canal+ decoder, a video games console or RGB-signal emitting appliances.

The SCART socket AV2 (3), located on the rear of the television, is intended to connect a VCR or a camcorder (VHS, 8 mm, S-VHS or Hi-8).

We strongly recommend the use of this type of connection, which gives a better picture quality. To use the peripheral appliance that you have connected, press the AV key on your remote control (press once to select AV1; twice to select AV2; three times for AV3: see "Other Connections"). This selection is automatic for some appliances. Pressing ""play" on a VCR, or switching on a satellite receiver connected to AV1 or AV2 will automatically switch on your television.

When you stop the VCR, if you have not changed channels while watching the VCR, the television automatically switches back to the channel you were watching beforehand. If the television has been switched on from the VCR, it switches to standby when the VCR is switched off. The television automatically switches to 16/9 format if the connected appliance delivers the corresponding signal.

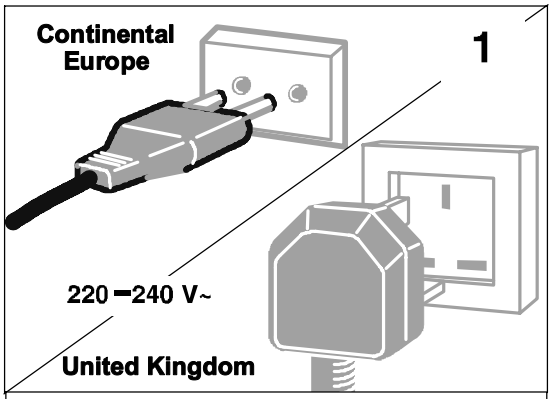

The plug is fitted with a fuse which protects your television. If your television does not work, the fuse may be blown. In this case, replace it with an identical 5 Amp ASTA or Ir BSI (BS 1362) certified fuse.

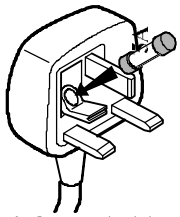

Note: the mains lead of your television is fitted with a moulded plug. This lead contains all the safety equipment, so you are advised when replacing it not to use a non-specific commercially-available model.

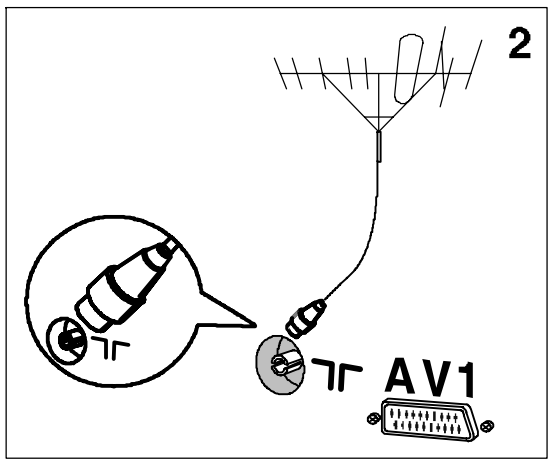

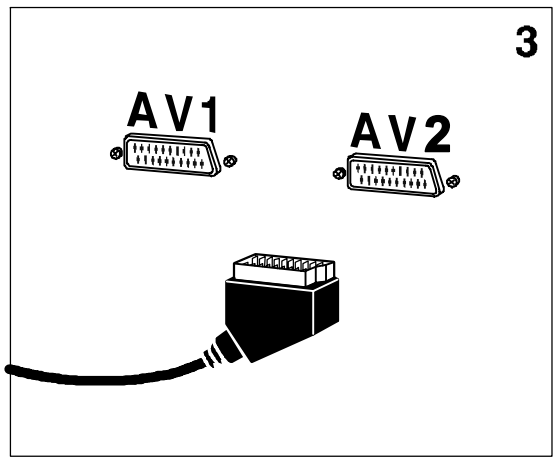

GB

Remote control

GB

Display of channel, time, sound (yellow button) (and zoom for models with zoom)

This key is active only when using the Teletext (blue key)

Standby

Call up programme list (green button)

Reminder of picture preferences (red button)

Illumination of remote control buttons

To leave a menu or Teletext

Volume adjustment

Sound mute

Selecting appliances connected to the television (AV1, AV2 ...)

The red, green, yellow and blue keys are also used for the Teletext.

Call up Teletext / Toptext / Fastext function (purple button)

Right/Left Selection within menus and **Zoom Function** (for models with this function)

Confirm an action or **validate** a menu option

Go to adjustment function **MENU**

Move Up/Down in menus

Change programme

Go to programmes and enter numerical values in menus

For programme numbers higher than 10, press the *0* key on the remote control: **"- -"** appears on the screen. Now use the number keys on the remote control to enter first the tens digit then the units digit.

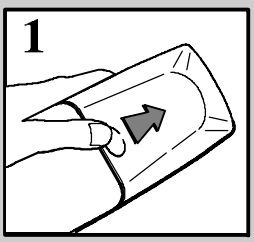

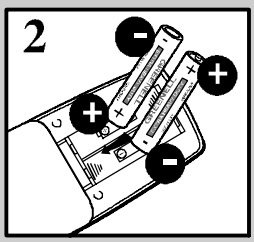

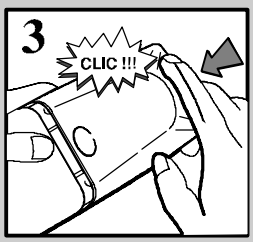

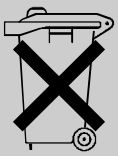

Please respect the environment! Before throwing any batteries away, consult your distributor who may be able to take them back for specific recycling.

Navigation principles

Calling up the Installation main menu

If there is no menu displayed on the screen, press and hold the *menu* key on the remote control. The settings **SUMMARY** is displayed first, followed by the **INSTALLATION MAIN MENU** which you can use to operate your television.

INSTALLATION MAIN MENU

Exit
Manual programming
Auto installation
Programme organisation
Personal settings

GB

Calling up the Settings summary

Press and release the *menu* key on the remote control to display the list of menus available for using your television functions or adjusting your television

SUMMARY

Exit
Teletext
Picture
Sound
List
Time
Preferences

Calling up a Menu

Select the menu you wish using the **Up/Down** keys. Press the *ok* key to validate..

Navigating within the Menus

Use the **Up/Down** keys (1) to select a line.

Use the **Left/Right** keys (2) to:

- Increase or decrease a value:
  for example:
  Fine tuning ◄|►
- Select an option:
  for example: Reception ◄|► Aerial
  Reception ◄|► Cable
- Activate or deactivate an option:
  for example: Decoder ❑ ⇨ ☑
- Access a sub-menu:
  for example: Picture preferences|►

You can use the *ok* (3) key to:

- Activate or deactivate an option:
  for example: Decoder ❑ ⇨ ☑
- Access a sub-menu:
  for example: Picture preferences|►
- Validate an action:
  for example: Store on PR number

Use the *exit* (4) key to exit a menu.

MANUAL PROGRAMMING

Return

Standard	EURO BG
Reception	Cable
Autosearch	CH- -
Fine tuning	
Store on PR number	- -
Name	- - - -
Decoder	☑
External sound path	☐

Enter channel number or start autosearch with < or >.

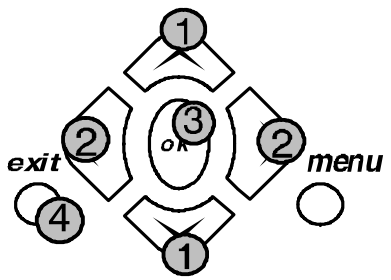

Installing your television for the first time

First plug the television into a mains power outlet and to the external aerial or a cable network, then switch on using the ON/OFF switch ⏻ located on the front or the side of your set.
When you switch on your television for the first time, the language selection menu* is displayed (Fig. 1). If this does not happen, set the television to standby then press and hold the *pr* – key on the television until this menu appears.

GB

Installation Instructions (start)

1. Use the **Up/Down** keys to select the language in which you wish the menus to be displayed.
2. Then validate using *ok*.
3. A list of countries* is now displayed (Fig. 2). Select the country in which you live, or the country from which you wish to receive the broadcasts if you live in a border area.
4. Then validate using *ok*.
5. A welcome message is displayed.
6. Run the automatic installation sequence using *ok*.
7. A message appears to inform you that automatic installation has started (Fig. 3). Wait for a few minutes.
   A new message will inform you when automatic installation is completed.
8. If you wish to check or modify the channel organisation, press *ok* and see the **Programme organisation** chapter.

   If you do not wish to modify the channel organisation, you can exit the menu by pressing *exit* then watch the channel of your choice. Choose the desired channel using the number keys (1, 2, 3, ...) and the *pr* + / *pr* – keys.

   If you have a decoder, see the **Manual programming** chapter.

*Your television will only search for channels corresponding to the country you have selected. See the **Manual channel programming** chapter to install any channels not found.*
*For cable networks, read the **Automatic channel installation** chapter to install any channels not found.*

*The list of languages and countries may vary from one model to another.

Installation Instructions (end)

(Fig. 1)

English
► Français
Deutsch
Italiano
Español
Português
Nederlands
Svenska
Dansk
Norwisch

OK

(Fig. 2)

COUNTRY SELECTION

Exit
United Kingdom
Eire
► France
Germany
Italy
Spain
Portugal
Holland
Belgium and Luxembourg
Switzerland
Austria
Sweden
Denmark
Norway

Other

Select your country and press OK

(Fig. 3)

SEARCHING

AUTO INSTALLATION

003 STATIONS FOUND

Searching for TV stations.
Please wait. To cancel press EXIT.

Automatic installation

The **Automatic installation** function is useful if you have to go through the installation procedure again, such as when moving house. This function deletes all previously memorised programmes. To install a new channel, you should use the **Manual programming** function.

Before running **AUTO INSTALLATION**, check the **PERSONAL SETTINGS** menu to ensure that the country displayed is correct.

*Your television will only search for channels corresponding to the selected country, so see the **Manual programming** chapter to install any channels not found. For cable networks, if you have not found certain channels, select **Other** instead of a country name in the **PERSONAL SETTINGS** menu, then run automatic installation again.*

GB

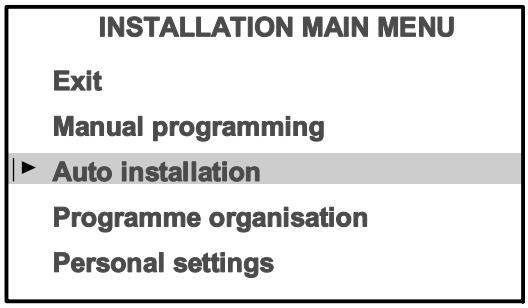

1. Press and hold the *menu* key on the remote control to display the **INSTALLATION MAIN MENU** (The **SUMMARY** appears first, followed by the **INSTALLATION MAIN MENU**).
2. Select the **Auto installation** line.
3. Validate using *ok*.

A message will inform you that **Automatic installation** has begun.
Wait for a few minutes.
A new message will inform you when **Automatic installation** is completed.

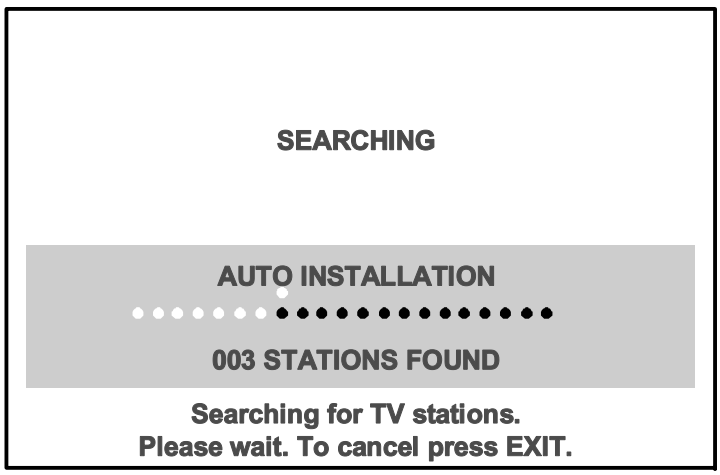

If you wish to check or reorganize your channel display, press the *ok* key and see the **Programme organisation** chapter.

If you do not wish to **reorganize your programmes**, you can exit this menu by pressing *exit*, then watch the programme of your choice. Choose the desired programme using the number keys (1, 2, 3, ...) and the *pr +* / *pr −* keys.

Programme organisation

During automatic installation, your television will search for the channel name and assign it a programme number according to the selected country. You can use the **PROGRAMME ORGANISATION** menu to name any channel name not found, to change the order in which the channels are displayed, or to delete channels for which reception is too poor. Follow the messages at the bottom of the screen. For further details, read the information below.

GB

If you wish to access the **PROGRAMME ORGANISATION**, *menu thereafter, first press and hold the* ***menu*** *key on the remote control to display the* **INSTALLATION MAIN MENU** *(the* **SUMMARY** *is displayed first, followed by the* **INSTALLATION MAIN MENU***) then select* **Programme organisation** *and validate using* ***ok***.

INSTALLATION MAIN MENU
Exit
Manual programming
Auto installation
► Programme organisation
Personal settings

- To delete a programme for which reception is too poor:

1. Select the line marked **Select program.**
2. Use the *pr +* / *pr –* or **Left/Right** keys to list your channels.
3. When you get to a channel you wish to delete, select the line marked **Delete program.**
4. Press *ok* to delete the programme.
5. .Validate using *ok*.

- To organize your channels to suit you:

1. Select the line marked **Select program.**.
2. Use the *pr +* / *pr –* or **Left/Right** keys and the programmes logos to find the programme to which you wish to give the No.1.
   Its present number appears on the line marked **Select program.**.
3. Select the line marked **Swap with PR.**
4. Enter **01.**
5. Press *ok*. The two programmes swap position and the desired programme becomes N°1.
6. Repeat the above procedure for the other channels.

- To name your channels:

1. Select the line marked **Change pr. name**
2. Select the character you wish to modify using the **Left/Right** keys.
3. Use the *1* and *2* keys to display the letter you require.
   The name you have entered will be memorised when you move to another line or exit the menu.

If you wish to change the order in which your programmes are displayed or if you wish to name other programmes, repeat the procedures described above.

When you have finished organizing the programmes, exit the menu using ***exit***.

PROGRAMME ORGANISATION			
Return		10	MTV
		11	FR2
		12	TF1
		13	EURO
		14	CH40
Select program.	◄|► 13	15	CC01
Swap with PR.	- -	16	ARTE
Change pr. name	EURO	17	CART
Delete program.	13	18	- - - -
		19	ARD
Select programme number using PR-/PR+ or </> or 0 to 9 keys.			

Select the line marked **Return** to return to the previous menu.

Manual programming

The manual installation function is useful if some programmes have not been installed even after AUTOMATIC INSTALLATION.

1. Press and hold *menu*, the **SUMMARY** is displayed first, followed by the **INSTALLATION MAIN MENU**.
2. Select the line marked **Manual programming**.
3. Display the menu using *ok*.
4. Now continue by following the messages at the bottom of the screen. For further details, read the information below.

INSTALLATION MAIN MENU

- Exit
- ► Manual programming
- Auto installation
- Programme organisation
- Personal settings

GB

Standard :
Select the standard using **Left/Right** keys that corresponds to your country from the list of standards.

The number of standards proposed will differ from one model to another.

France	for France and Luxemburg
DKK'	eg. for Eastern Europe and the Middle-East
I	for the United Kingdom and Ireland
Euro BG	for Western Europe

MANUAL PROGRAMMING

Return	
Standard	**EURO BG**
Reception	**Cable**
Autosearch	**CH- -**
Fine tuning	
Store on PR number	**- -**
Name	**- - - -**
Decoder	☑
External sound path	☐

Enter channel number or start autosearch with < or >.

Select the line marked **Return** to return to the previous

Reception :
Your television can pick up channels either via an aerial (RF channels) or via a cable network. Certain cable networks use the same frequencies as the RF channels. If this is the case, you must select **Aerial** instead of **Cable**.

Autosearch :
Enter the programme number if you know it. If not, search using the **Left/Right** keys. Your television will stop at the first channel it tunes into. If you wish to memorize it, go to the line marked **Store on PR number**. If not, resume the search using the **Left/Right** keys.

Fine tuning :
You can use this to improve the picture if the transmitter frequency is out of adjustment. Use the **Left/Right** keys to obtain the best possible picture and sound.

Store on PR number :
Enter the programme number you wish to give the channel (e.g.: 01 for BBC1). Memorise using *ok*.

Name :
If the station has been identified by the transmitter, its name will be inscribed automatically. You can change the proposed name or enter it if it has not already been identified. Select the character you wish to modify using the **Left/Right** keys. Use the *1* or *2* keys to display the character you desire.

Decoder :
Use the **Left/Right** keys to tick the box if the channel is coded and if a decoder is connected to the AV1 jack.

External sound path :
Switch on your decoder. If the sound is coded or if you have no sound, activate or deactivate the box as required using the **Left/Right** keys.

⚠ *Once you have made all the adjustments you wish to a programme, go to* **Store on PR number** *and press ok to memorise these. Then move on to the next channel.*

Once you have completed your Manual Programming, exit the menu using *exit*.

Personal settings

1. Press and hold the *menu* key: the **SUMMARY** is displayed first, followed by the **INSTALLATION MAIN MENU**.
2. Select the line marked **Personal settings**.
3. Display the menu using *ok*.
4. Continue by following the messages at the bottom of the screen.

For further details, read the information below.

GB

INSTALLATION MAIN MENU
Exit
Manual programming
Auto installation
Programme organisation
► Personal settings

Menu language :
Select the language in which the menus are to be displayed.

Country :
Indicate the country in which you are if you wish to rerun **Automatic Programming**.

For cable networks, if certain channels have not been found, select **Other** *instead of the country name before running automatic installation again.*
You may find that the characters of certain teletext languages are inaccessible for the selected country.

Auto volume level :
This is a sound control function which aims to equalise the volume level between different channels, and between different programmes on the same channel.

Activate or deactivate the auto volume level as required.

On models equipped with Virtual Dolby Surround, this function remains inactive if **Dolby Virtual** *has been selected in the* **SOUND** *menu (see* ***Volume Control****).*

AV1, AV2, AV3 name :
Use these to give a name to each of your audio-visual programmes. Select the character you wish to modify using the **Left/Right** keys. Use the *1* or *2* keys to display the desired character.

Prog. to be used for reference time :
To display the time using the *info* key or to use the alarm function, the television clock must be set to the correct time. Select the line marked **Prog. to be used for reference time** and select a channel which broadcasts teletext. The time is set automatically and is displayed after the channel number.

Exit the menu using *exit*.

PERSONAL SETTINGS		
Return		
Menu language	English	
Country	UK	
Auto volume level	☑	
AV1 name	VCR	
AV2 name	- - - -	
AV3 name	CAMC	
Prog. to be used for reference time	◂|▸ 06	13:15
Select a station from which you want to get the reference time.		

Select the line marked **Return** to return to the previous menu.

Preferences

1. Display the **SUMMARY** by pressing and releasing the *menu* key on the remote control .
2. Select the line marked **Preferences**.
3. Display the menu using *ok* .

Make your choice from the proposed options. Use the information below to help you.

PREFERENCES		
Return		
Show program. number	◂|▸	☑
AV2 video input		Video
AV3 video input		S-Video
Format control		Auto
Picture preferences		

Show program. number :
If you wish to permanently display the number of the programme you are watching, tick the box using the **Left/Right** keys. Press the **Left/Right** keys again to deactivate this function.

AV2 video input :
Use the **Left/Right** keys to select the type of video signal received at the AV2 SCART socket (Video or S-Video).

AV3 video input :
Use the **Left/Right** keys to select the type of video signal received at the AV3 sockets (these sockets are located on the front or the side of the television).

Format control :
Use the **Left/Right** keys to select the desired picture format:

Auto : if the transmitter (for 16/9 format TV's) or the appliance connected to one of the peripheral jacks delivers the switching signal, the television automatically adapts to the transmitted picture format.

16/9 : manually selects widescreen picture format.

4/3 : manually selects this picture format.

If you have selected **16/9** *or* **4/3**, *the television will switch back to* **Auto** *when you change channels or you switch off.*

Picture preferences :

To access the **PICTURE PREFERENCES** menu, press *ok* .

If you wish, you can personalize certain picture settings. Select and set the proposed options. Use the information below to help you.

PICTURE PREFERENCES		
Return		
Settings	◂|▸	Personal
Brightness		
Colour		
Contrast		

Settings :
Select **Standard** or **Personal**.

Standard corresponds to the factory settings.

Personal corresponds to the settings that you have entered yourself.

The lines **Brightness**, **Colour** *and* **Contrast** *are displayed only if you have selected* **Personal** *on the* **Settings** *line.*

Select each line one after the other and enter your required settings. You can recall these picture settings by pressing the red key on the remote control.

Exit the menu using *exit* .

Select the line marked **Return** to return to the previous menu.

GB

GB

Picture Adjustment

Display the **SUMMARY** using the *menu* key on the remote control. Select **Picture**. Validate using *ok*. The **PICTURE** menu is displayed.

Select and set the proposed options. Use the information below to help you.

Brightness, Colour, Contrast, Sharpness:
Select each of these lines one after the other and set as required.

Contrast expand :
Select this line then choose the desired Contrast expand setting (High or Low).

Tone :
Select this line then choose the desired colour tone (Warm, Neutral or Cold).

Exit the menu using *exit*.

PICTURE	
Return	
Brightness	
Colour	
Contrast	
Sharpness	
Contrast expand	Neutral
Tone	Cold

Select the line marked **Return** to return to the previous menu.

Sound Settings

Display the **SUMMARY** using the *menu* key on the remote control. Select the line marked **Sound**. Validate using *ok*. The **SOUND** menu is displayed.

Select and set the proposed options. Use the information below to help you.

Sound type :

The choices available to you depend on your television model and the broadcast. Stereo, Dual or NICAM reception and the corresponding choices are only available on Stereo or NICAM Stereo televisions.

Select this line, then select the type of sound you desire.

Sound mode :
Select this line, then choose the desired mode using the **Left/Right** keys.

The choices available to you depend on your television model and the type of sound. **Magic** *and* **Dolby Virtual** *modes are only available in stereo on TV's equipped with Virtual Dolby Surround.*

Stereo wide *is only available on Stereo or Nicam televisions not equipped with Virtual Dolby Surround.*

Balance L/R :
Select this line, then balance the sound between the Left and Right loudspeakers.

Treble, Bass :
Select each of these lines and adjust to suit you.

Surround effect :

This line appears only if you have selected **Dolby Virtual** *on the* **Sound mode** *line.*

Select this line and adjust the surround effect to suit you.

Exit the menu using *exit*.

SOUND	
Return	
Sound type	Automatic
Sound mode	Normal
Balance L/R	
Treble	
Bass	
Surround effect	

Broadcast	Choice
mono	automatic - mono
stereo	mono - stereo
dual	sound 1 - sound 2
NICAM-3	sound 1 - sound 2 - sound 3
AV	stereo - sound 1 - sound 2

Mode	Effect
Normal :	reproduces the original sound (mono or stereo).
Wide :	gives a stereo effect on mono sounds.
Stereo wide :	accentuates the stereo effect.
Magic :	accentuates the stereo effects and adds echo.
Dolby Virtual :	Virtual Dolby Surround.

Virtual Surround Dolby is based on Dolby Pro Logic decoding for the reproduction of the Left, Right, Centre and Virtual Surround sound channels using two loudspeakers.

""Dolby", ""Pro Logic" and the double -D symbol are trademarks of the Dolby Laboratories Licensing Corporation.

Manufactured under licence from Dolby Laboratories Licensing Corporation.

Time

You can use this menu to switch your television on or off automatically at a set time.

Display the **SUMMARY** using the *menu* key on the remote control. Select the line marked **Time**. Validate using *ok*. The **TIME** menu is displayed.

Sleep timer :
Use the **Left/Right** keys to choose how long you wish to view before the television switches off. The television will switch off automatically at the end of this period. To cancel, set to **00:00**.

One minute before switching off, a message will inform you that the television is about to go off. If you wish to keep it on, press any key on the remote control or the local keyboard.

The television switches to Child lock mode after an automatic stop. It can only be switched on again from the remote control.

TIME		
Return		
Sleep timer	◂|▸	00 : 00
Current time		11 : 28
Wake-up timer		☑
Wake-up time		07 : 07
Programme number		01 BBC1
Daily		☐

Select the line marked **Return** to return to the previous menu.

Current time :
The current time is given by the Teletext (see **PERSONAL SETTINGS** menu). You can also set the time manually using the number keys (0 to 9) on your remote control.

Wake-up timer :

If you wish to be woken up by your television on the channel of your choice, you must first set the television clock to the correct time (see above).

Use the **Left/Right** keys to tick the box and display the **Wake-up timer** menu.

The lines **Wake-up time**, **Programme number** and **Daily** only appear if you have ticked the box on the line marked **Wake-up timer**.

Wake-up time :
Use the number keys (0 to 9) on the remote control to set the time at which you wish to be woken.

Programme number :
Select the programme you wish to be woken by.

Daily :
Tick this box if you wish to be awakened at this time every day.

Exit the menu using *exit*.

Set the television to standby using the ⏻ key on the remote control. The red indicator light on the television flashes.
The television will come on automatically at the programmed time and will go off one hour later if you do not use the remote control.

GB

List of Channels

This list contains up to 10 pages. The number of pages depends on the number of programmes memorized. For each programme, the list indicates the station name or type and the programme number. The 3 AV programmes are listed on page 11.

GB

To display the list, press the ***list*** key on the remote control
or
Display the **SUMMARY** using the ***menu*** key on the remote control. Select the line marked **List**. Validate using *ok*.

The page displayed is the page containing the programme you are watching. It is identified in the list by the symbol **TV**.
To display the next page, press the **Right** key.
To display the previous page, press the **Left** key.

If you wish to watch one of the programmes on the page displayed:
Enter the last digit of the programme number (e.g. for 25 simply enter 5) on the remote control. The list disappears and your programme is selected.

Or,
- Select the programme using the **Up/Down** keys.
- Validate using *ok*.
- Exit the menu using ***exit***.

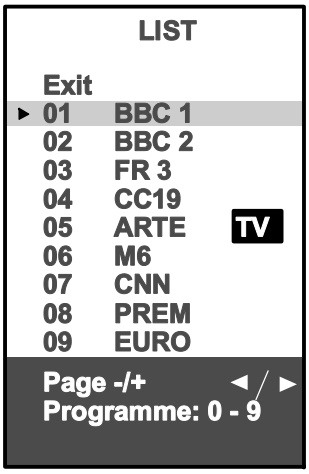

Daily viewing

GB

Selecting Programmes

For channels 1 to 9, press the number key corresponding to the desired channel on the remote control. For programme numbers higher than 10, press the *0* key on the remote control: **"- -"** appears on the screen. Now use the number keys on the remote control to enter first the tens digit then the units digit.

*If you press 0 while "- -" is already displayed, the display returns to **0-** , in which case you can only select programmes 1 to 9.*

Scrolling the Programmes

You can scroll through the programmes using the *pr* + / *pr* − keys.

Audio-visual (AV) Programmes

Press the *av* key to call the last audio-visual (AV) programme watched. Press repeatedly to scroll the audio-visual (AV) programmes on the screen.

Volume Control

Use the volume +/- keys to increase or decrease the volume.

Muting the Sound

Press the key to mute the sound. Press again to restore the sound.

Zoom

(16/9 models only)

This function is useful for 4/3 or letterbox pictures (black bands at the top and bottom of the screen).

Use the **Left/Right** keys to select the desired zoom position:

ZOOM 0: 4/3 picture (black bands at the sides).
FULL SCREEN: for a 4/3 picture that fills the screen.
ZOOM 1: for letterbox pictures.

Displaying Information

Press the *info* key to display the following information on the screen: channel number and name, time, zoom, type of sound.

Television Lock

You can use this function to prevent anyone from switching on the television using the buttons on the television set.

The buttons on the television set are locked in the following cases:

- If you switch off the set by pressing and holding the ⏻ key on the remote control for more than 3 seconds,
- After a programmed stop,
- If the television is set to standby when the alarm has been set.

When the television is locked the red power will be light flashing.
The television can now only be operated from the remote control.
To release the lock, press any number key on the remote control.

Switching Off the Television

To switch off the television, press the Standby key on the remote control or press the ON/OFF switch on the television set.

Teletext

Certain channels broadcast an electronic news page service with a range of different information services. The presentation and use of the Teletext differ from one country to another and from one programme to another (Teletext, Fastext or Toptext).

Press the *text* key to display the **Teletext Index** (page 100).

A message will inform you if the programme you are watching has no Teletext service.

GB

To call up a page:
Enter the 3 digits of the page number you wish to consult (for example, 150 or 170).
After a moment, the page appears.
Use the **Left/Right** keys to consult the next or the previous page.

Standard Functions

Rolling pages:
Some information is displayed over several sub-pages. It is scrolled on your screen as it is received.
To stop scrolling, select **STOP** using the **Up/Down** keys and validate using *ok*. Press *ok* again to continue scrolling.

Masked text:
To reveal a hidden answer (for example in a quiz programme), select **???** using the **Up/Down** keys and validate using *ok*. Press *ok* again to hide the answers.

Zoom :
Select **ZOOM** using the **Up/Down** keys then press the *ok* key once to magnify the top of the screen, twice to magnify the bottom of the screen (the page will scroll from top to bottom) and a third time to return to the normal display.

Display:
You can superpose the Teletext page over the TV picture. To do this, select **MIX** using the **Up/Down** keys then validate by pressing the *ok* key. Press again *ok* to return to the normal display.

Sub-code:
You can use this to access a sub-page directly.
Select "**- - - -**" using the **Up/Down** keys. Then enter the four digits of the required sub-page number.

*Certain programmes have **Alarm** pages that you can set to appear at the time you require. For example: for 15h30 enter **1530** as the sub-page number then press **exit**. You must of course leave the television on the programme which is to transmit the **Alarm** page.*

Index:
To call up the index page, select **100** using the **Up/Down** keys then validate using *ok*.

Direct access:
You can use the yellow and blue keys to directly access the pages indicated in the bar at the bottom of the screen.

Fastext functions:
If the Teletext you receive is Fastext, a sub-menu at the bottom of the screen appears which you can use to select from the 4 headings according to its colour.
To select a heading, press the key of the corresponding colour.

Toptext functions:
If the Teletext you receive is TOPtext, the pages are arranged into headings and sub-headings by subject.
You can select the first page of a heading directly by pressing the blue key, or the first page of a sub-heading by pressing the yellow key.

Other functions:
With certain Teletext channels, it is possible to have sub-titles overlaid on the screen for certain broadcasts as well as certain news flash updates.
The corresponding page number is indicated in the Telextext index.
Once you have found the page, the sub-title or the news flash will be overlaid onto the TV picture.
The navigation status bar disappears after a few seconds. To display it again, press the *text* key.

To exit Teletext, press *exit* or *text*.

Other Connections

The CINCH Video and Audio sockets (1)* are provided to connect a VHS or 8mm camcorder.

The S and CINCH Audio sockets (1)* are provided to connect a S-VHS or Hi-8 camcorder.

To use the appliance you have connected, press the av *key several times until the AV3 programme is selected on the screen. When you switch off the connected appliance, the television will remain on the AV3 programme and you must use the numerical keys on the remote control to select a programme.*

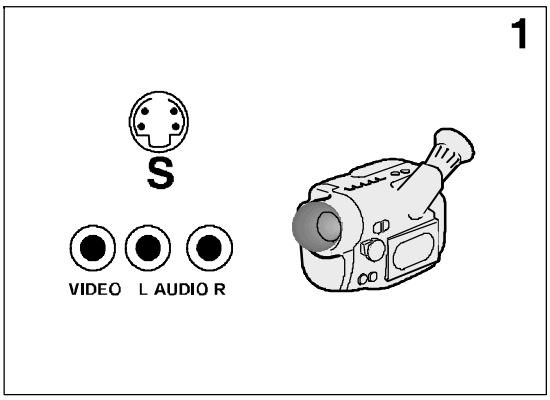

* on models equipped with this function

The headphone socket (2)* is provided to connect a headphone or earphones.

Connecting headphones mute the sound from the television loudspeakers.

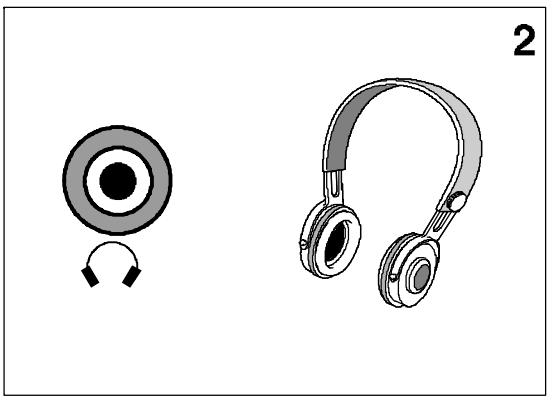

* on models equipped with this function

Other Possibilities

Copying a cassette:

Plug the VCR **you wish to record to** into the SCART socket AV2.
Plug the appliance **you wish to copy from** as follows: into the peripheral jack AV1 for a VCR; into the CINCH AV3 jacks for a camcorder (see table below).

PLAY		RECORD		CALL PROGRAMME
Appliance	SCART Socket	Appliance	SCART Socket	
VCR	Peripheral AV1	VCR ou Camcorder	AV2	AV1
Camcorder	Cinches or S-Video AV3	VCR ou Camcorder	AV2	AV3

Connecting a HiFi or AV amplifier

If you wish to connect a HiFi or AV amplifier, plug it into the peripheral jack AV2 using a SCART-CINCH type lead.

GB

SUB AUDIO SIGNAL MODULE - SUB MODULE AUDIO - AUDIO SIGNAL SUBMODUL - SUB MODULO AUDIO

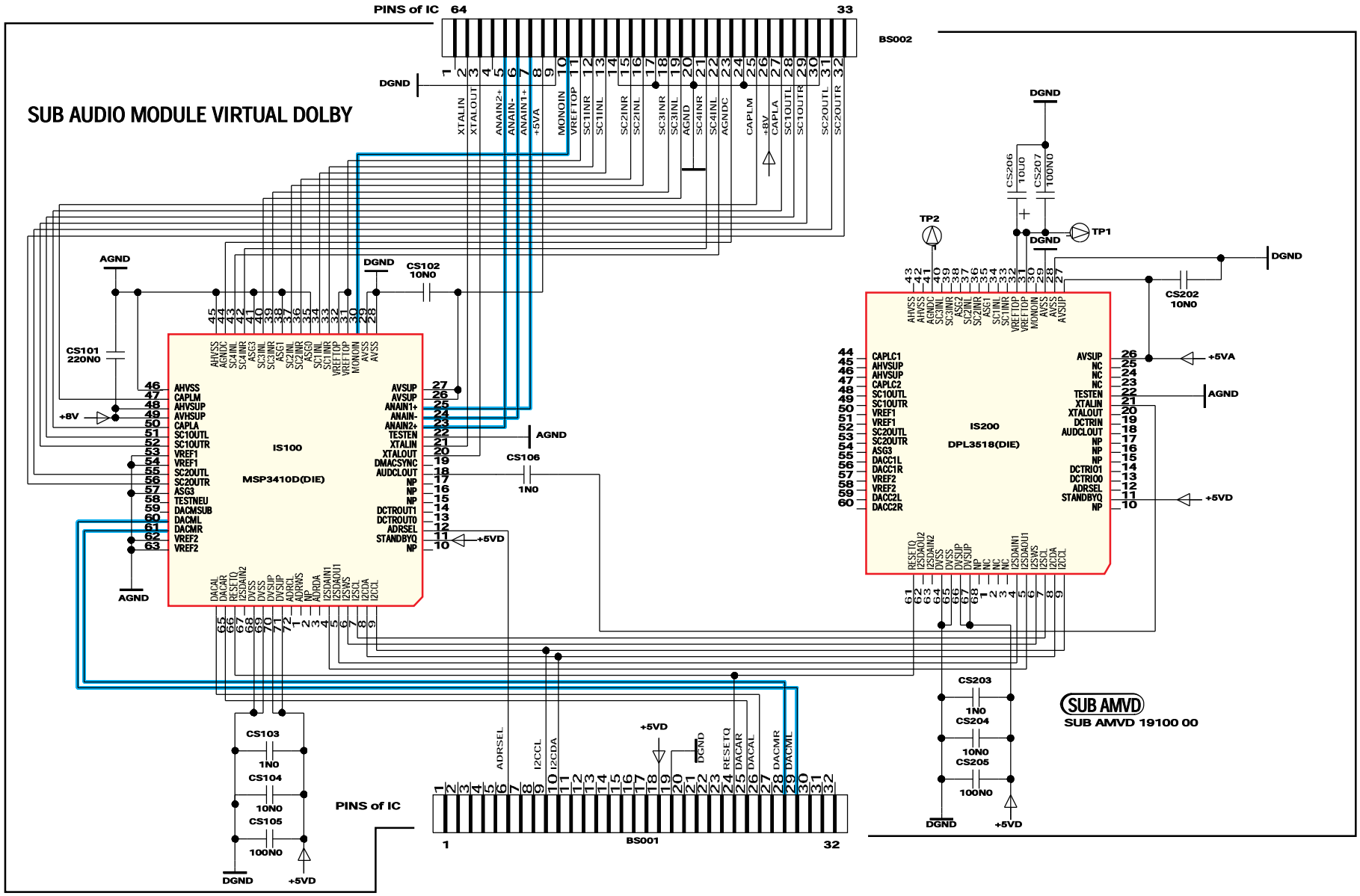

POWER SUPPLY - ALIMENTATION - NETZTEIL - ALIMENTAZIONE - ALIMENTACIÓN

(5) : standby

Note :
During measurements in the power supply unit
- Use the primary power unit ground (PGND).

Attention :
Mesure dans le bloc alimentation
- Utiliser la masse du bloc alimentation (PGND).

Achtung :
Bei Messungen im Primärnetzteil
- Primärnetzteilmasse verwenden (PGND).

Attenzione :
misure nell'alimentatore primario
- usare massa alimentazione primario (PGND).

Cuidado :
Medida en el bloque de alimentacion
- Utilizar la masa del bloque de alimentacion (PGND).

Part of board connected to mains supply.
Partie du châssis reliée au secteur.
Primärseite des Netzteils.
Parte dello châssis collegata alla rete.
Parte del chassis conectâr a la red.

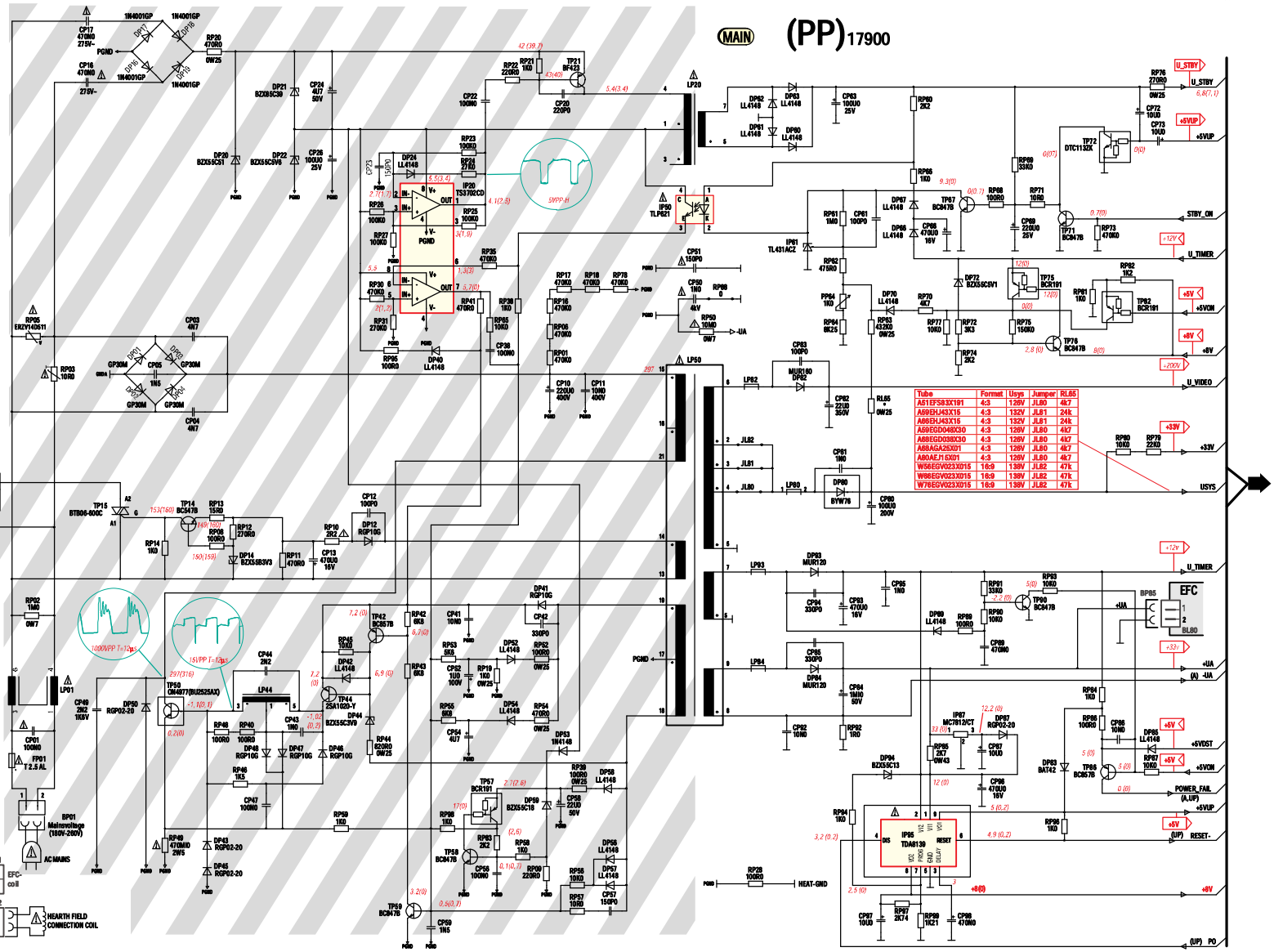

Tube	Format	Usys	Jumper	RL65
A51EF583X191	4:3	126V	JL80	4k7
A59EHJ43X16	4:3	132V	JL81	24k
A66EHJ43X16	4:3	132V	JL81	24k
A59EGD040X30	4:3	126V	JL80	4k7
A68EGD038X30	4:3	126V	JL80	4k7
A68AGA25X01	4:3	126V	JL80	4k7
A90AEJ15X01	4:3	126V	JL80	4k7
W56EGV023X015	16:9	138V	JL82	47k
W66EGV023X015	16:9	138V	JL82	47k
W76EGV023X015	16:9	138V	JL82	47k

⚠ Use isolating mains transformer - Utiliser un transformateur isolateur du secteur -Einen Trenntrafo verwenden
Utilizar un transformador aislador de red - Utilizzare un trasformatore per isolarvi dalla rete

SCANNING - BALAYAGE - ABLENKUNG - BARRIDO - SCANSIONE

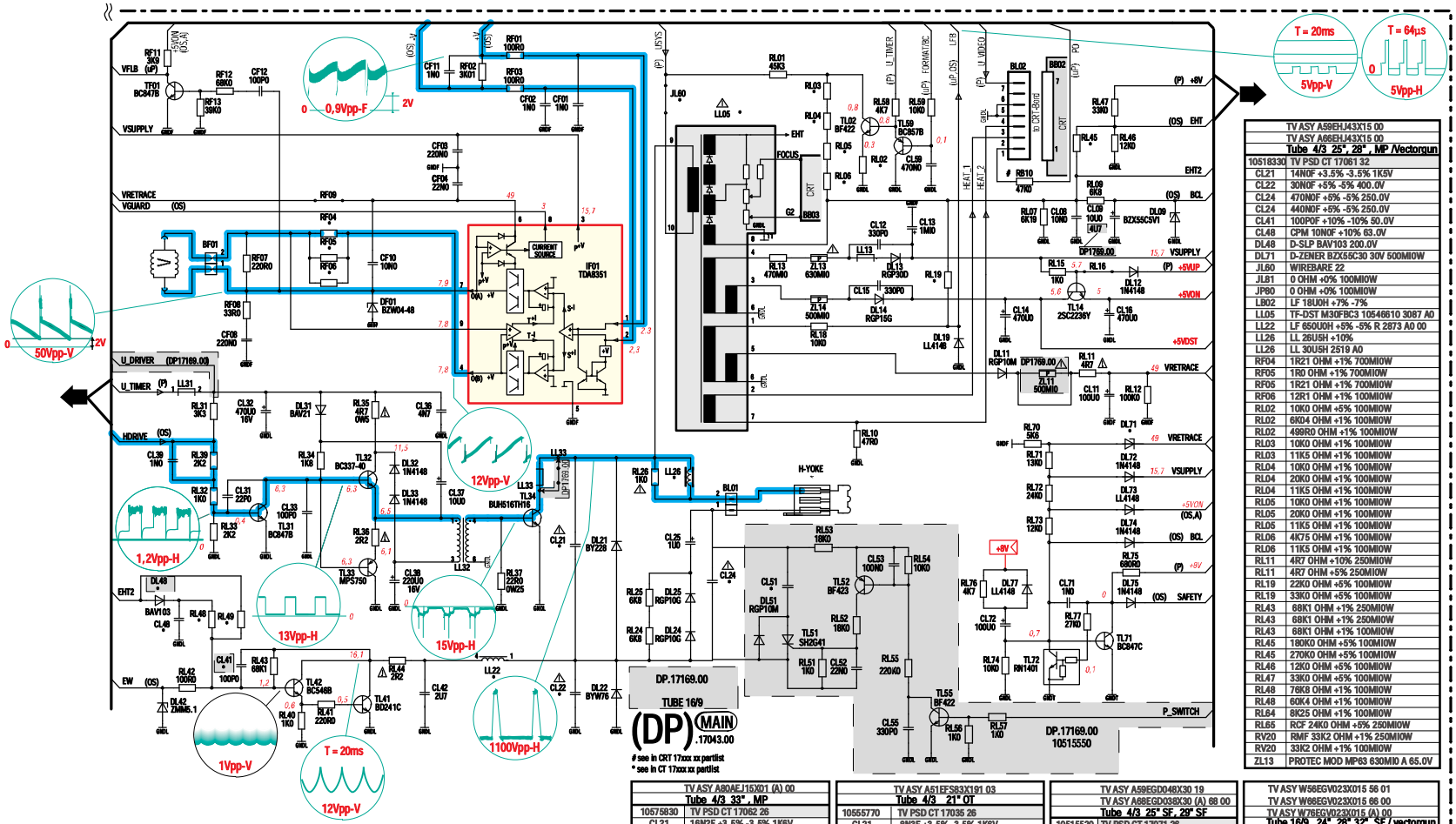

TV ASY A59EHJ43X15 00 TV ASY A66EHJ43X15 00 Tube 4/3 25", 28" , MP /Vectorgun	
10518330	TV PSD CT 17061 32
CL21	14N0F +3.5% -3.5% 1K6V
CL22	30N0F +5% -5% 400.0V
CL24	470N0F +5% -5% 250.0V
CL24	440N0F +5% -5% 250.0V
CL41	100P0F +10% -10% 50.0V
CL48	CPM 10N0F +10% 63.0V
DL48	D-SLP BAV103 200.0V
DL71	D-ZENER BZX55C30 30V 500MI0W
JL60	WIREBARE 22
JL81	0 OHM +0% 100MI0W
JP60	0 OHM +0% 100MI0W
LB02	LF 18U0H +7% -7%
LL05	TF-DST M30FBC3 10546610 3087 A0
LL22	LF 650U0H +5% -5% R 2873 A0 00
LL26	LL 26U5H +10%
LL26	LL 30U5H 2519 A0
RF04	1R21 OHM +1% 700MI0W
RF05	1R0 OHM +1% 700MI0W
RF05	1R21 OHM +1% 700MI0W
RF06	12R1 OHM +1% 100MI0W
RL02	10K0 OHM +5% 100MI0W
RL02	6K04 OHM +1% 100MI0W
RL02	499R0 OHM +1% 100MI0W
RL03	10K0 OHM +1% 100MI0W
RL03	11K5 OHM +1% 100MI0W
RL04	10K0 OHM +1% 100MI0W
RL04	20K0 OHM +1% 100MI0W
RL04	11K5 OHM +1% 100MI0W
RL05	10K0 OHM +1% 100MI0W
RL05	20K0 OHM +1% 100MI0W
RL05	11K5 OHM +1% 100MI0W
RL06	4K75 OHM +1% 100MI0W
RL06	11K5 OHM +1% 100MI0W
RL11	4R7 OHM +10% 250MI0W
RL11	4R7 OHM +5% 250MI0W
RL19	22K0 OHM +5% 100MI0W
RL19	33K0 OHM +5% 100MI0W
RL43	68K1 OHM +1% 250MI0W
RL43	68K1 OHM +1% 250MI0W
RL43	68K1 OHM +1% 100MI0W
RL45	180K0 OHM +5% 100MI0W
RL45	270K0 OHM +5% 100MI0W
RL46	12K0 OHM +5% 100MI0W
RL47	33K0 OHM +5% 100MI0W
RL48	76K8 OHM +1% 100MI0W
RL48	60K4 OHM +1% 100MI0W
RL64	8K25 OHM +1% 100MI0W
RL65	RCF 24K0 OHM +5% 250MI0W
RV20	RMF 33K2 OHM +1% 250MI0W
RV20	33K2 OHM +1% 100MI0W
ZL13	PROTEC MOD MP63 630MI0 A 65.0V

⚠ Indicates critical safety components, and identical components should be used for replacement. Only then can the operational safety be garanteed.

Le remplacement des éléments de sécurité (repérés avec le symbole ⚠) par des composants non homologués selon la Norme CEI 65 entraine la non-conformité de l'appareil.
Dans ce cas, la responsabilité du fabricant n'est plus engagée.

Wenn Sicherheitsteile (mit dem Symbol ⚠ gekennzeichnet) durch nicht normgerechte Teile ersetzt werden, erlischt die Haftung des Herstellers.

La sostituzione degli elementi di sicurezza (contrassegnati con il segno ⚠) con componenti non omologati secondo la norma CEI 65 comporta la non conformitá dell'apparecchio.
In tal caso é "esclusa la responsabilità" del costruttore.

La subtitución de elementos de seguridad (marcados con el simbolo ⚠) por componentes no homologados segun la norma CEI 65, provoca la no conformidad del aparato.
En ese caso, el fabricante cesa de ser responsable.

TV ASY A80AEJ15X01 (A) 00 Tube 4/3 33" , MP	
10575830	TV PSD CT 17062 26
CL21	16N2F +3.5% -3.5% 1K6V
CL22	30N0F +5% -5% 400.0V
CL24	560N0F +5% -5% 250.0V
CL41	100P0F +10% -10% 50.0V
CL48	10N0F +10% 63.0V
DL48	D-SLP BAV103 200.0V
DL71	D-ZENER BZX55C30 30V 500MI0W
JL60	WIREBARE 22
JL80	0 OHM +0% 100MI0W
LB02	LF 32U0H +4% -4%
LL05	TF-DST TDS29 TBD 11
LL22	LF 650U0H +5% -5% R 2873 A0 00
LL26	LL 26U5H +10%
RF05	1R21 OHM +1% 700MI0W
RF06	10R0 OHM +1% 100MI0W
RL02	6K04 OHM +1% 100MI0W
RL03	4K75 OHM +1% 100MI0W
RL04	4K75 OHM +1% 100MI0W
RL05	4K75 OHM +1% 100MI0W
RL06	6K81 OHM +1% 100MI0W
RL19	13K0 OHM +5% 100MI0W
RL45	150K0 OHM +5% 100MI0W
RL48	76K8 OHM +1% 100MI0W
RL49	560K0 OHM +5% 100MI0W
RL65	RCF 4K7 OHM +5% 250MI0W
RV20	RMF 23K7 OHM +1% 250MI0W

TV ASY A51FS83X191 03 Tube 4/3 21" OT	
10555770	TV PSD CT 17035 26
CL21	8N3F +3.5% -3.5% 1K6V
CL22	33N0F +5% -5% 1K0V
CL24	440N0F +5% -5% 250.0V
CL41	1N0F +10% -10% 50.0V
DL71	D-ZENER BZX55C24 24V 500MI0W
JL60	WIREBARE 22
JL80	0 OHM +0% 100MI0W
LB02	LF 18U0H +7% -7%
LL05	TF-DST M30FBC3 10555640 3087 A0
LL22	LF 650U0H +5% -5% R 2873 A0 00
LL26	LL 85U0H 2519 A0
RF05	1R5 OHM +1% 700MI0W
RF06	10R0 OHM +1% 100MI0W
RL02	6K04 OHM +1% 100MI0W
RL03	10K0 OHM +1% 100MI0W
RL04	10K0 OHM +1% 100MI0W
RL05	10K0 OHM +1% 100MI0W
RL06	3K32 OHM +1% 100MI0W
RL45	110K0 OHM +5% 100MI0W
RL49	60K4 OHM +1% 100MI0W
RL65	4K7 OHM +5% 250MI0W
RV20	23K7 OHM +1% 250MI0W

TV ASY A59EGD048X30 19 TV ASY A68EGD038X30 (A) 68 00 Tube 4/3 25" SF, 29" SF	
10515520	TV PSD CT 17071 26
CL21	16N2F +3.5% -3.5% 1K6V
CL22	30N0F +5% -5% 400.0V
CL24	510N0F +5% -5% 250.0V
CL41	100P0F +10% -10% 50.0V
CL48	10N0F +10% 63.0V
DL48	D-SLP BAV103 200.0V
DL71	D-ZENER BZX55C30 30V 500MI0W
JL60	WIREBARE 22
JL80	0 OHM +0% 100MI0W
LB02	LF 32U0H +4% -4%
LL05	TF-DST TDS29 TBD 13
LL22	LF 650U0H +5% -5%
LL26	LL 26U5H +10%
RF05	RMF 1R0 OHM +1% 700MI0W
RL02	6K8 OHM +5% 100MI0W
RL03	4K75 OHM +1% 100MI0W
RL04	4K75 OHM +1% 100MI0W
RL05	4K75 OHM +1% 100MI0W
RL06	4K75 OHM +1% 100MI0W
RL19	15K0 OHM +5% 100MI0W
RL45	180K0 OHM +5% 100MI0W
RL48	100K0 OHM +5% 100MI0W
RL49	300K0 OHM +5% 100MI0W
RL65	4K7 OHM +5% 250MI0W
RV20	33K2 OHM +1% 250MI0W

TV ASY W56EGV023X015 56 01 TV ASY W66EGV023X015 66 00 TV ASY W78EGV023X015 (A) 00 Tube 16/9 24", 28", 32", SF / vectorgun	
10515530	TV PSD CT 17083 38
CL21	15N5F +3.5% -3.5% 1K6V
CL22	27N0F +5% -5% 400.0V
CL24	440N0F +5% -5% 250.0V
CL41	100P0F +10% -10% 50.0V
CL48	100N0F +5% 63.0V
CL51	290N0F +5% -5% 250.0V
DL48	D-SLP BAV103 200.0V
DL71	D-ZENER BZX55C24 24V 500MI0W
JL60	WIREBARE 22
JL82	0 OHM +0% 100MI0W
LB02	LF 32U0H +4% -4%
LL05	TF-DST TDS29 15314460 10
LL22	LF 650U0H +5% -5%
LL26	LL 30U5H 2519 A0
RF05	1R21 OHM +1% 700MI0W
RL02	4K99 OHM +1% 100MI0W
RL03	6K49 OHM +1% 100MI0W
RL04	6K49 OHM +1% 100MI0W
RL05	6K49 OHM +1% 100MI0W
RL06	2K37 OHM +1% 100MI0W
RL19	13K0 OHM +5% 100MI0W
RL45	390K0 OHM +5% 100MI0W
RL48	220K0 OHM +5% 100MI0W
RL49	180K0 OHM +5% 100MI0W
RL65	47K0 OHM +5% 250MI0W
RV20	100K0 OHM +1% 250MI0W

CONTROL MICROPROCESSOR - MICROPROCESSEUR DE COMMANDE - MIKROPROZESSOR - MICROPROCESSORE DEI COMANDI - MICROPROCESADOR DE LOS MANDOS

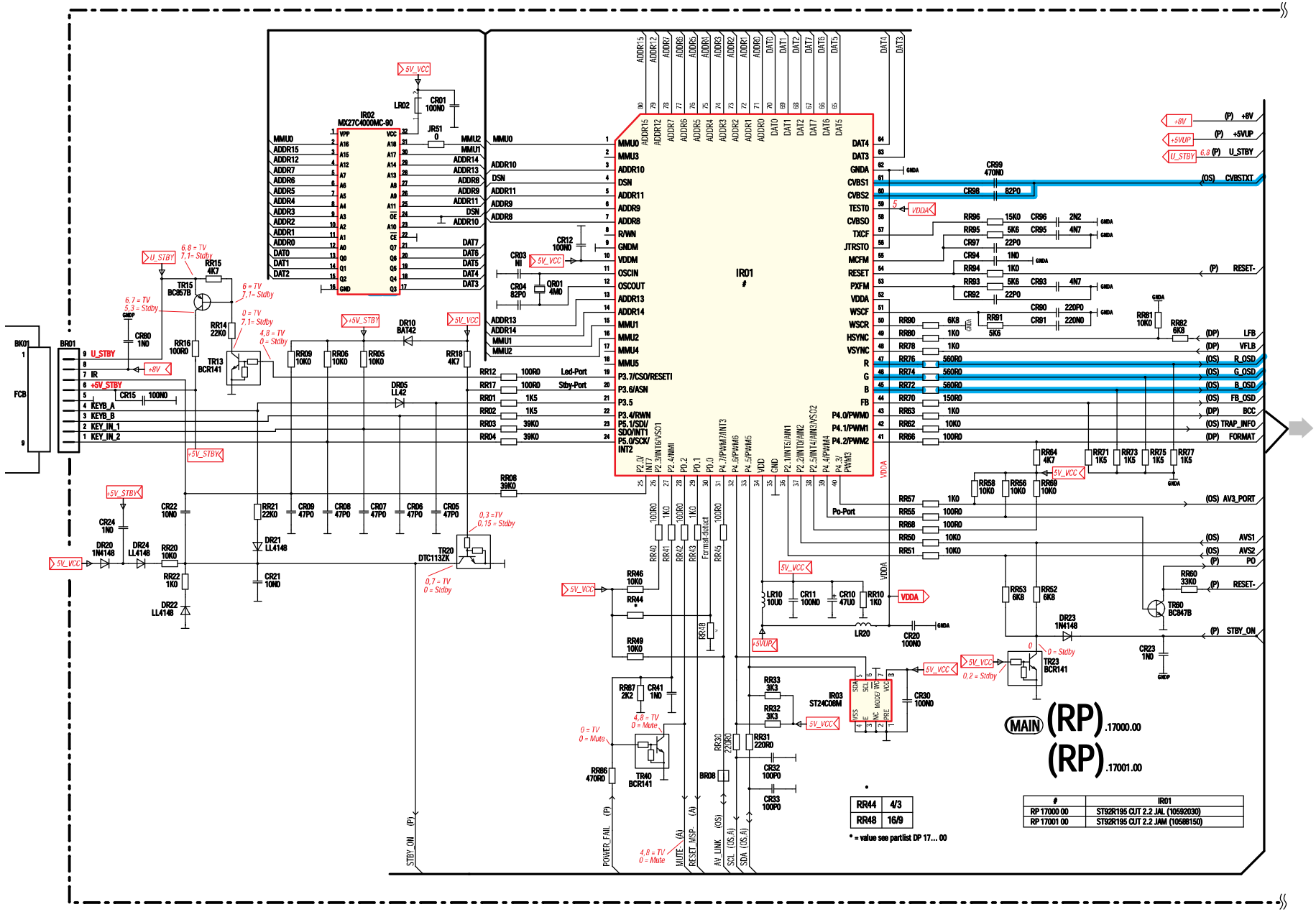

RF/FI/ SCART INTERFACE/VIDEO SIGNAL PROCESSING -HF/FI INTERFACE PERITELEVISION/TRAITEMENT LUMINANCE CHROMINANCE - HF/ZF/ SCART INTERFACE/VIDEO SIGNALVERARBEITUNG - RF/FI /PRESA PERITEL/ELABORAZIONE VIDEO - RF/FI /EUROCONECTOR / TRATAMENTO VIDEO

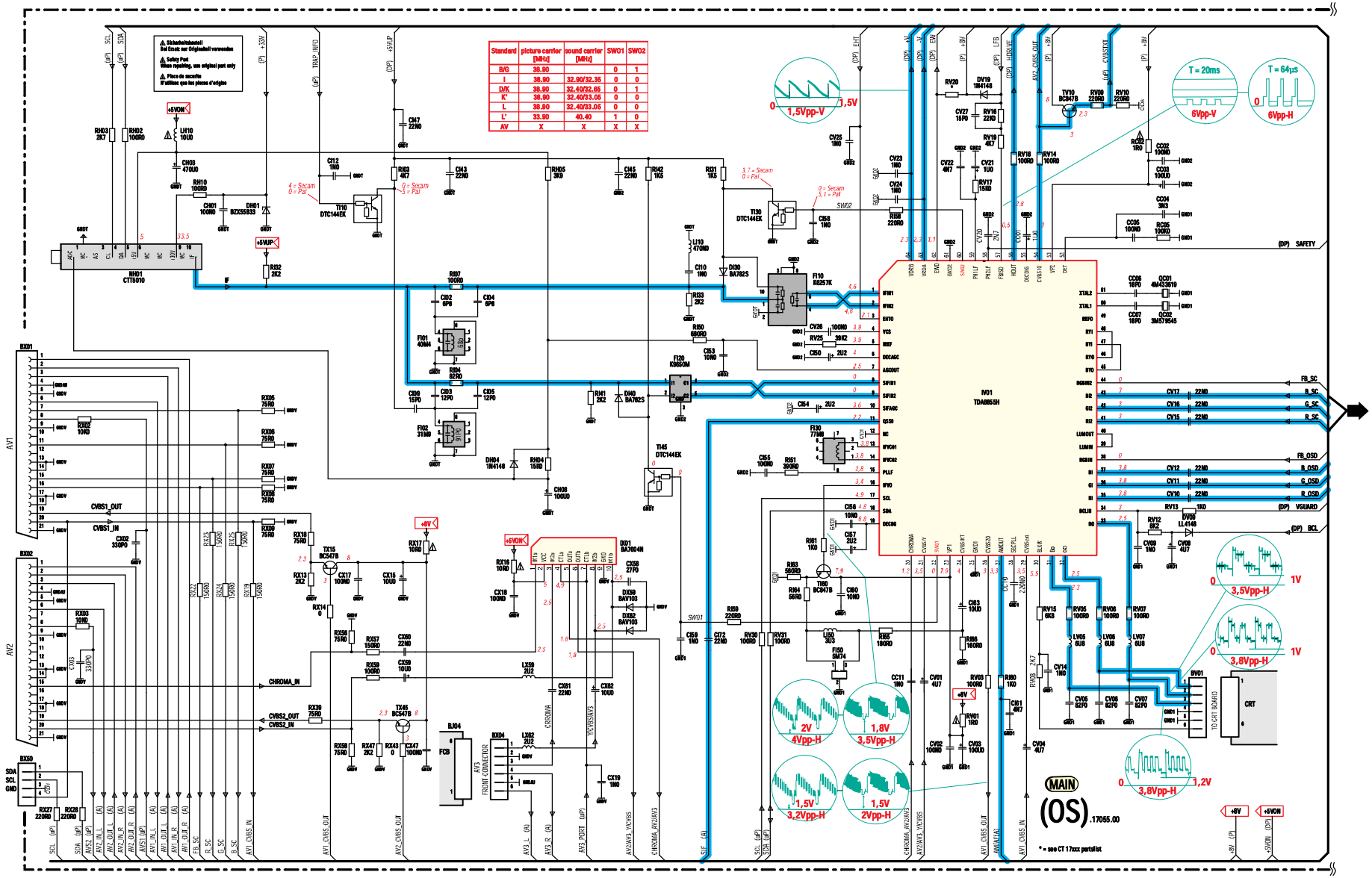

RF/FI/ SCART INTERFACE/VIDEO SIGNAL PROCESSING -HF/FI INTERFACE PERITELEVISION/TRAITEMENT LUMINANCE CHROMINANCE - HF/ZF/ SCART INTERFACE/VIDEO SIGNALVERARBEITUNG - RF/FI /PRESA PERITEL/ELABORAZIONE VIDEO - RF/FI /EUROCONECTOR/TRATAMENTO VIDEO

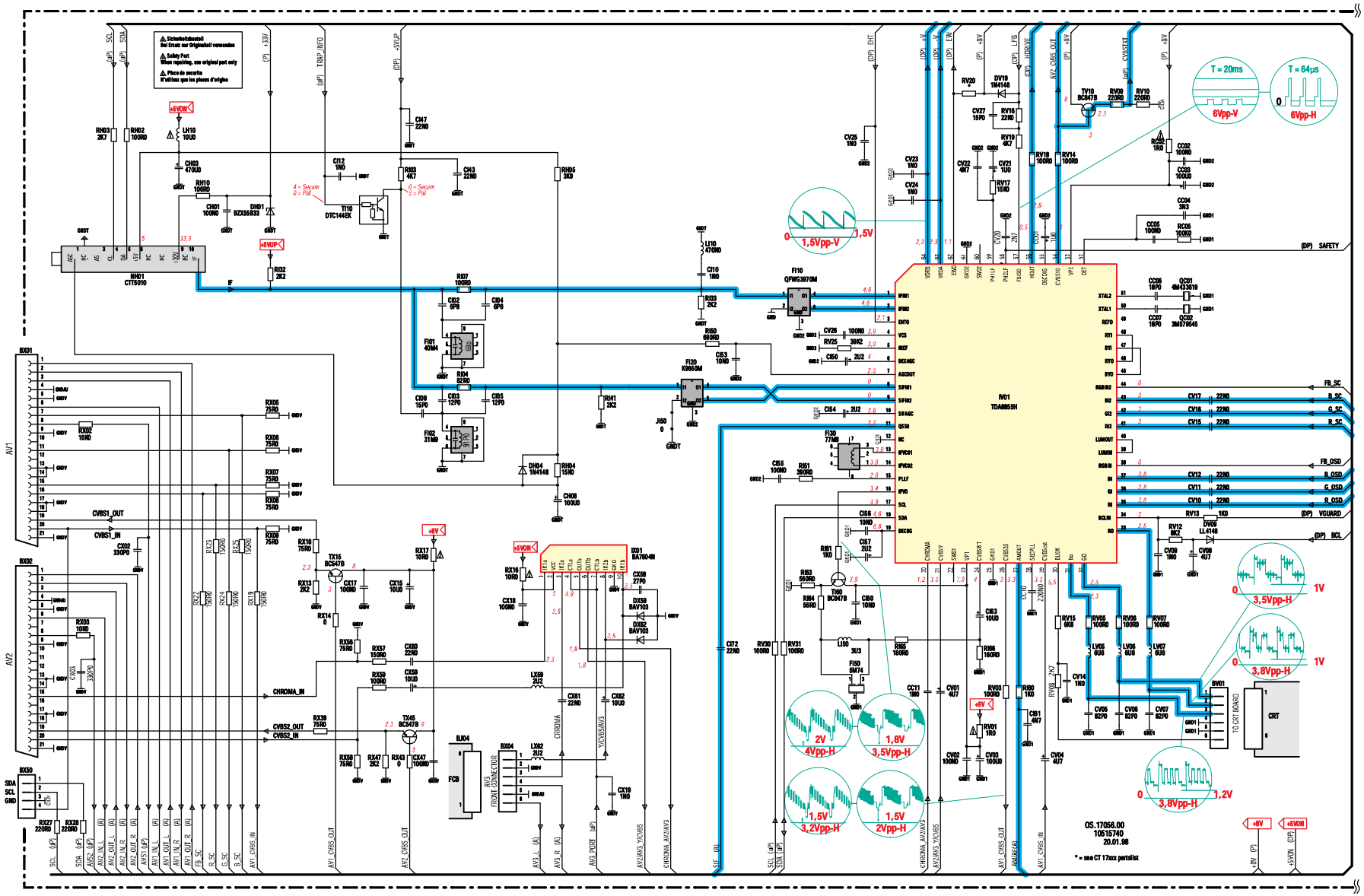

AMPLIFIER SCHEMATIC DIAGRAM - SCHEMA DE L'AMPLIFICATEUR - SCHALTBILD AUDIO-SIGNALVERABEITUNG - SCHEMA DELL' AMPLIFICATORE ESQUEMA DEL AMPLIFICADOR
(STEREO)

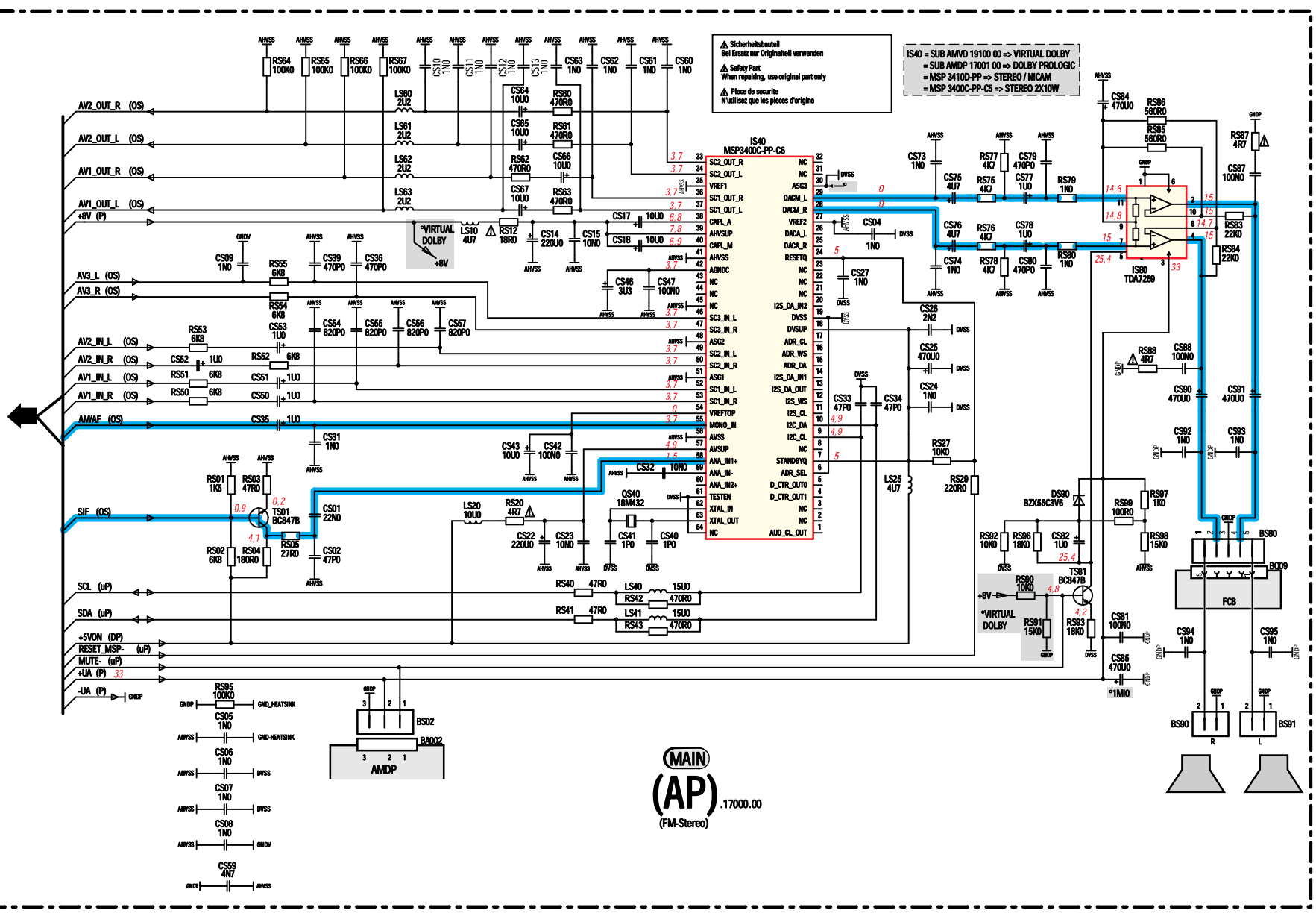

AMPLIFIER SCHEMATIC DIAGRAM - SCHEMA DE L'AMPLIFICATEUR - SCHALTBILD AUDIO-SIGNALVERABEITUNG - SCHEMA DELL' AMPLIFICATORE - ESQUEMA DEL AMPLIFICADOR
(MONO)

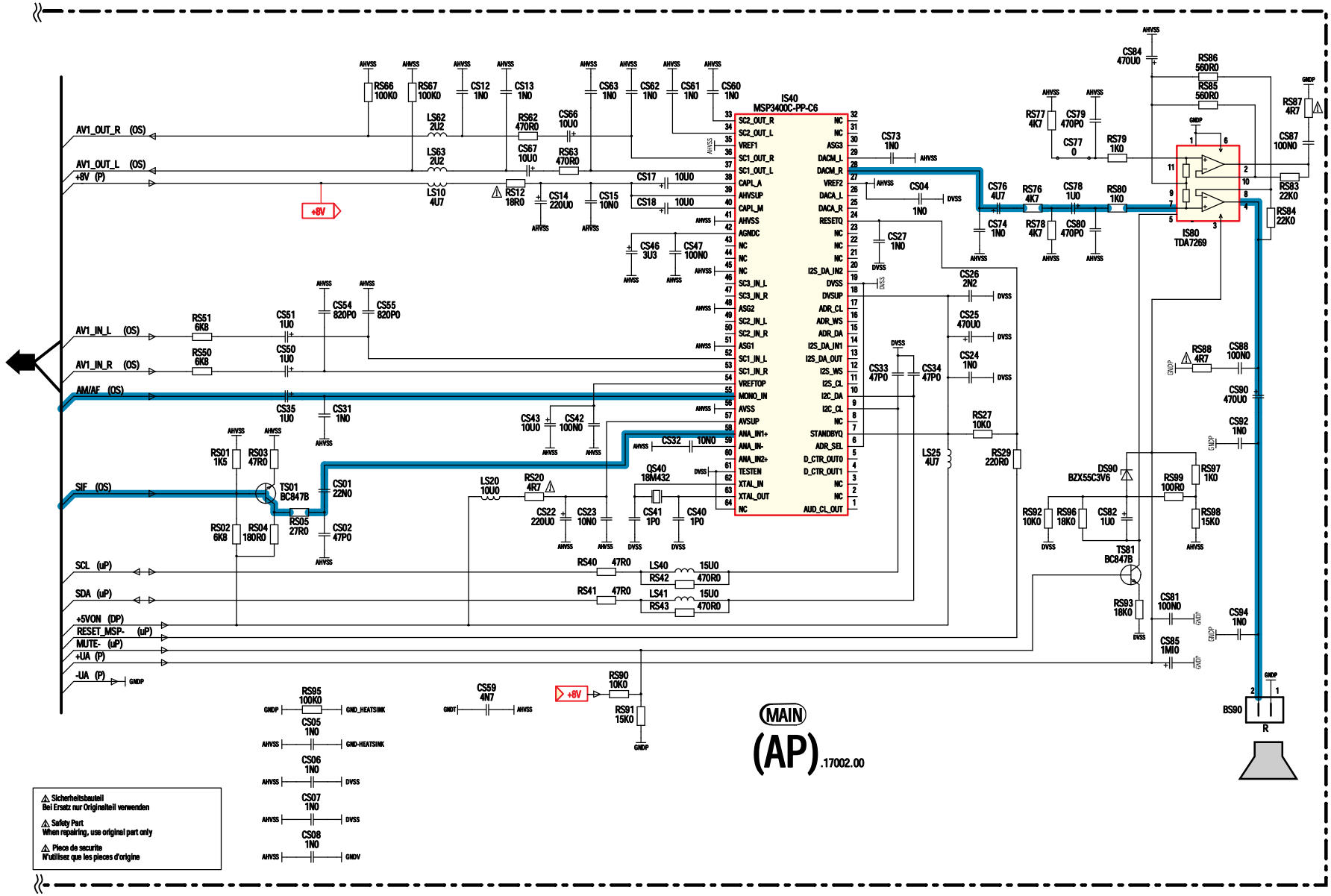

POWER SUPPLY - ALIMENTATION - NETZTEIL - ALIMENTAZIONE - ALIMENTACIÓN

(5) : standby

Note :
During measurements in the power supply unit
- Use the primary power unit ground (PGND).

Attention :
Mesure dans le bloc alimentation
- Utiliser la masse du bloc alimentation (PGND).

Achtung :
Bei Messungen im Primärnetzteil
- Primärnetzteilmasse verwenden (PGND).

Attenzione :
misure nell'alimentatore primario
- usare massa alimentazione primario (PGND).

Cuidado :
Medida en el bloque de alimentacion
- Utilizar la masa del bloque de alimentacion (PGND).

Part of board connected to mains supply.
Partie du châssis reliée au secteur.
Primärseite des Netzteils.
Parte dello châssis collegata alla rete.
Parte del chassis conectâr a la red.

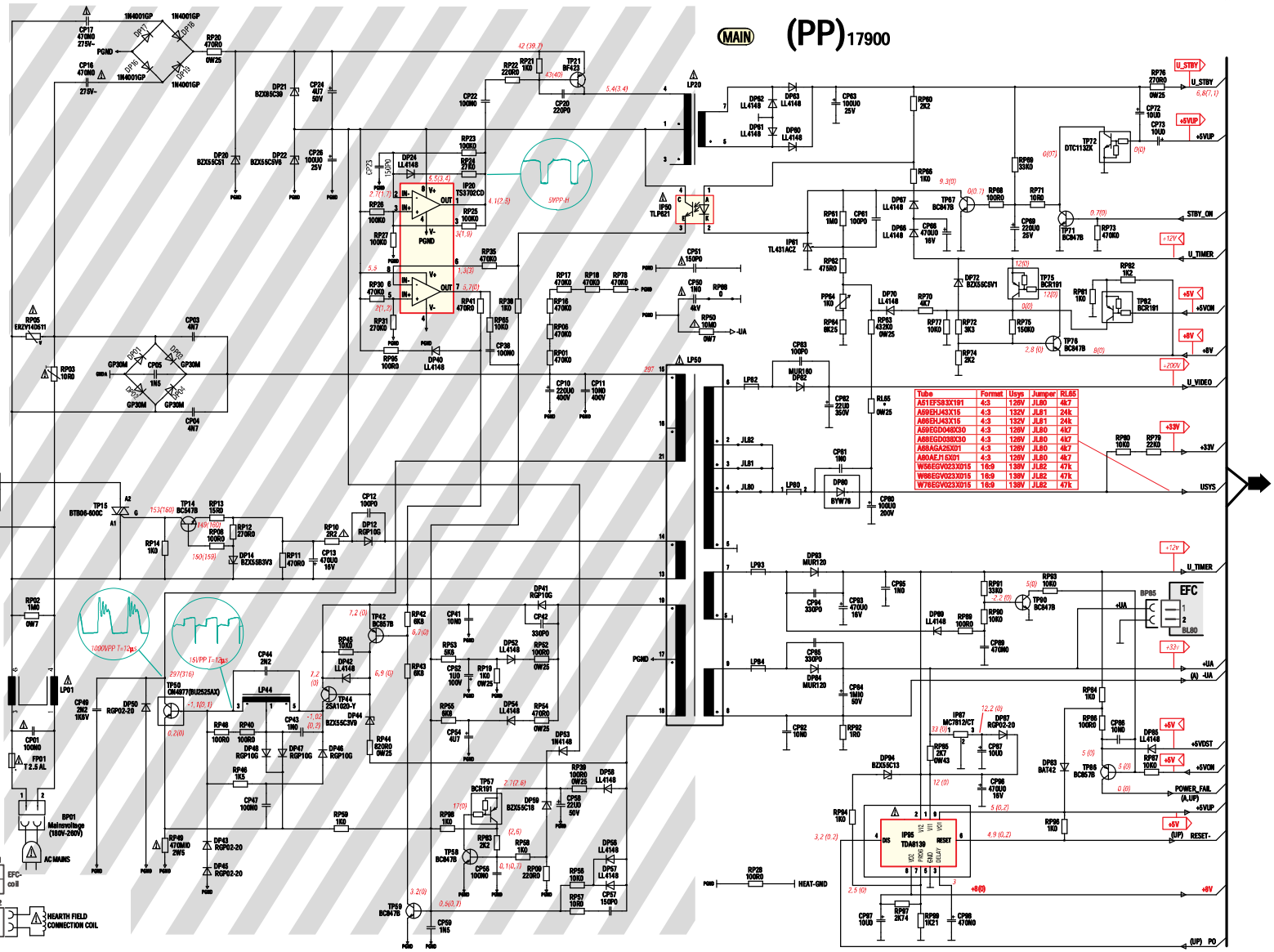

Tube	Format	Usys	Jumper	RL65
A51EF583X191	4:3	126V	JL80	4k7
A59EHJ43X16	4:3	132V	JL81	24k
A66EHJ43X16	4:3	132V	JL81	24k
A59EGD040X30	4:3	126V	JL80	4k7
A68EGD038X30	4:3	126V	JL80	4k7
A68AGA25X01	4:3	126V	JL80	4k7
A90AEJ15X01	4:3	126V	JL80	4k7
W56EGV023X015	16:9	138V	JL82	47k
W66EGV023X015	16:9	138V	JL82	47k
W76EGV023X015	16:9	138V	JL82	47k

⚠ Use isolating mains transformer - Utiliser un transformateur isolateur du secteur -Einen Trenntrafo verwenden
Utilizar un transformador aislador de red - Utilizzare un trasformatore per isolarvi dalla rete

SCANNING - BALAYAGE - ABLENKUNG - BARRIDO - SCANSIONE

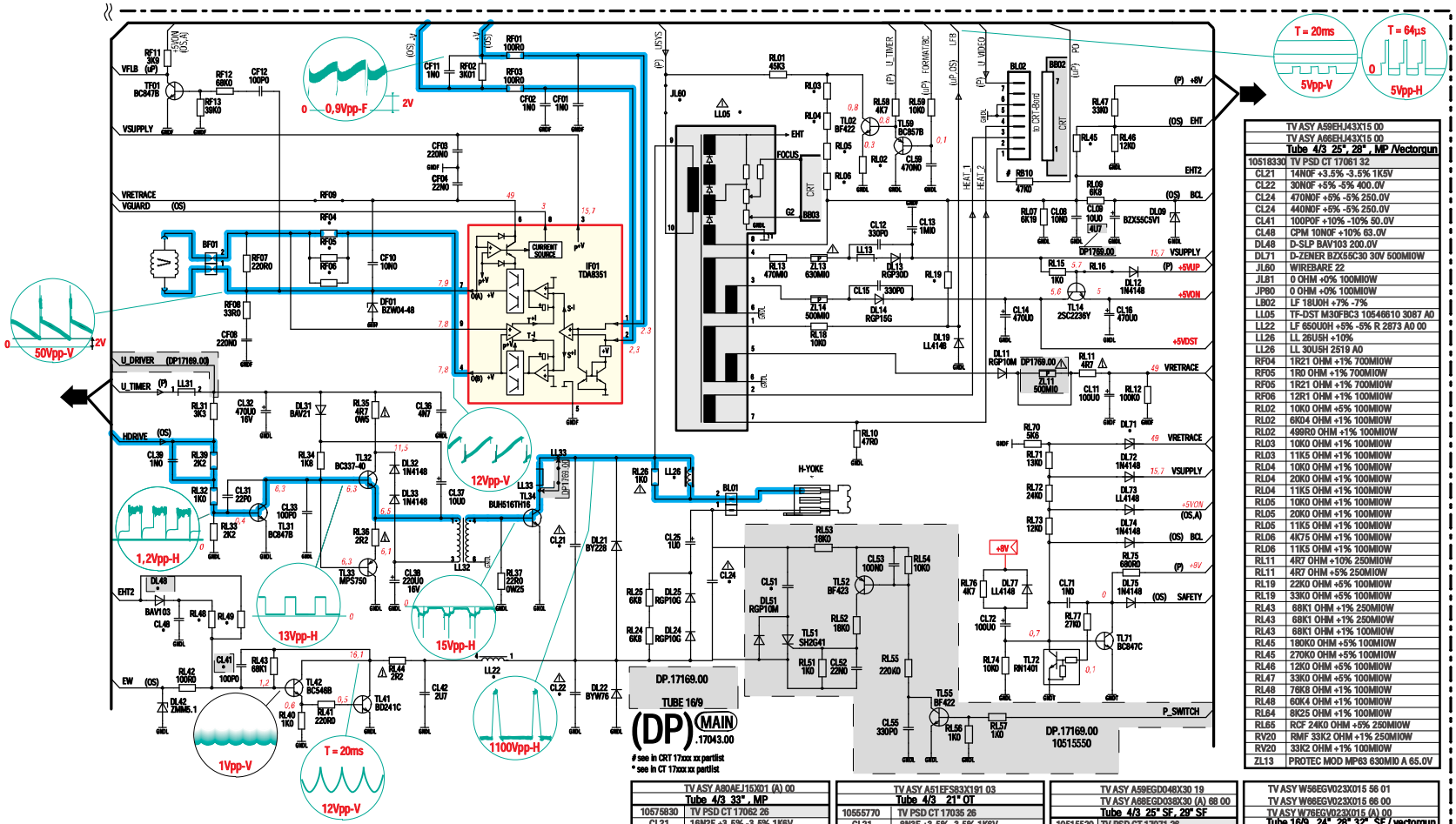

TV ASY A59EHJ43X15 00 TV ASY A66EHJ43X15 00 Tube 4/3 25", 28" , MP /Vectorgun	
10518330	TV PSD CT 17061 32
CL21	14N0F +3.5% -3.5% 1K6V
CL22	30N0F +5% -5% 400.0V
CL24	470N0F +5% -5% 250.0V
CL24	440N0F +5% -5% 250.0V
CL41	100P0F +10% -10% 50.0V
CL48	CPM 10N0F +10% 63.0V
DL48	D-SLP BAV103 200.0V
DL71	D-ZENER BZX55C30 30V 500MI0W
JL60	WIREBARE 22
JL81	0 OHM +0% 100MI0W
JP60	0 OHM +0% 100MI0W
LB02	LF 18U0H +7% -7%
LL05	TF-DST M30FBC3 10546610 3087 A0
LL22	LF 650U0H +5% -5% R 2873 A0 00
LL26	LL 26U5H +10%
LL26	LL 30U5H 2519 A0
RF04	1R21 OHM +1% 700MI0W
RF05	1R0 OHM +1% 700MI0W
RF05	1R21 OHM +1% 700MI0W
RF06	12R1 OHM +1% 100MI0W
RL02	10K0 OHM +5% 100MI0W
RL02	6K04 OHM +1% 100MI0W
RL02	499R0 OHM +1% 100MI0W
RL03	10K0 OHM +1% 100MI0W
RL03	11K5 OHM +1% 100MI0W
RL04	10K0 OHM +1% 100MI0W
RL04	20K0 OHM +1% 100MI0W
RL04	11K5 OHM +1% 100MI0W
RL05	10K0 OHM +1% 100MI0W
RL05	20K0 OHM +1% 100MI0W
RL05	11K5 OHM +1% 100MI0W
RL06	4K75 OHM +1% 100MI0W
RL06	11K5 OHM +1% 100MI0W
RL11	4R7 OHM +10% 250MI0W
RL11	4R7 OHM +5% 250MI0W
RL19	22K0 OHM +5% 100MI0W
RL19	33K0 OHM +5% 100MI0W
RL43	68K1 OHM +1% 250MI0W
RL43	68K1 OHM +1% 250MI0W
RL43	68K1 OHM +1% 100MI0W
RL45	180K0 OHM +5% 100MI0W
RL45	270K0 OHM +5% 100MI0W
RL46	12K0 OHM +5% 100MI0W
RL47	33K0 OHM +5% 100MI0W
RL48	76K8 OHM +1% 100MI0W
RL48	60K4 OHM +1% 100MI0W
RL64	8K25 OHM +1% 100MI0W
RL65	RCF 24K0 OHM +5% 250MI0W
RV20	RMF 33K2 OHM +1% 250MI0W
RV20	33K2 OHM +1% 100MI0W
ZL13	PROTEC MOD MP63 630MI0 A 65.0V

⚠ Indicates critical safety components, and identical components should be used for replacement. Only then can the operational safety be garanteed.

Le remplacement des éléments de sécurité (repérés avec le symbole ⚠) par des composants non homologués selon la Norme CEI 65 entraine la non-conformité de l'appareil.
Dans ce cas, la responsabilité du fabricant n'est plus engagée.

Wenn Sicherheitsteile (mit dem Symbol ⚠ gekennzeichnet) durch nicht normgerechte Teile ersetzt werden, erlischt die Haftung des Herstellers.

La sostituzione degli elementi di sicurezza (contrassegnati con il segno ⚠) con componenti non omologati secondo la norma CEI 65 comporta la non conformitá dell'apparecchio.
In tal caso é "esclusa la responsabilità" del costruttore.

La subtitución de elementos de seguridad (marcados con el simbolo ⚠) por componentes no homologados segun la norma CEI 65, provoca la no conformidad del aparato.
En ese caso, el fabricante cesa de ser responsable.

TV ASY A80AEJ15X01 (A) 00 Tube 4/3 33" , MP	
10575830	TV PSD CT 17062 26
CL21	16N2F +3.5% -3.5% 1K6V
CL22	30N0F +5% -5% 400.0V
CL24	560N0F +5% -5% 250.0V
CL41	100P0F +10% -10% 50.0V
CL48	10N0F +10% 63.0V
DL48	D-SLP BAV103 200.0V
DL71	D-ZENER BZX55C30 30V 500MI0W
JL60	WIREBARE 22
JL80	0 OHM +0% 100MI0W
LB02	LF 32U0H +4% -4%
LL05	TF-DST TDS29 TBD 11
LL22	LF 650U0H +5% -5% R 2873 A0 00
LL26	LL 26U5H +10%
RF05	1R21 OHM +1% 700MI0W
RF06	10R0 OHM +1% 100MI0W
RL02	6K04 OHM +1% 100MI0W
RL03	4K75 OHM +1% 100MI0W
RL04	4K75 OHM +1% 100MI0W
RL05	4K75 OHM +1% 100MI0W
RL06	6K81 OHM +1% 100MI0W
RL19	13K0 OHM +5% 100MI0W
RL45	150K0 OHM +5% 100MI0W
RL48	76K8 OHM +1% 100MI0W
RL49	560K0 OHM +5% 100MI0W
RL65	RCF 4K7 OHM +5% 250MI0W
RV20	RMF 23K7 OHM +1% 250MI0W

TV ASY A51FS83X191 03 Tube 4/3 21" OT	
10555770	TV PSD CT 17035 26
CL21	8N3F +3.5% -3.5% 1K6V
CL22	33N0F +5% -5% 1K0V
CL24	440N0F +5% -5% 250.0V
CL41	1N0F +10% -10% 50.0V
DL71	D-ZENER BZX55C24 24V 500MI0W
JL60	WIREBARE 22
JL80	0 OHM +0% 100MI0W
LB02	LF 18U0H +7% -7%
LL05	TF-DST M30FBC3 10555640 3087 A0
LL22	LF 650U0H +5% -5% R 2873 A0 00
LL26	LL 85U0H 2519 A0
RF05	1R5 OHM +1% 700MI0W
RF06	10R0 OHM +1% 100MI0W
RL02	6K04 OHM +1% 100MI0W
RL03	10K0 OHM +1% 100MI0W
RL04	10K0 OHM +1% 100MI0W
RL05	10K0 OHM +1% 100MI0W
RL06	3K32 OHM +1% 100MI0W
RL45	110K0 OHM +5% 100MI0W
RL49	60K4 OHM +1% 100MI0W
RL65	4K7 OHM +5% 250MI0W
RV20	23K7 OHM +1% 250MI0W

TV ASY A59EGD048X30 19 TV ASY A68EGD038X30 (A) 68 00 Tube 4/3 25" SF, 29" SF	
10515520	TV PSD CT 17071 26
CL21	16N2F +3.5% -3.5% 1K6V
CL22	30N0F +5% -5% 400.0V
CL24	510N0F +5% -5% 250.0V
CL41	100P0F +10% -10% 50.0V
CL48	10N0F +10% 63.0V
DL48	D-SLP BAV103 200.0V
DL71	D-ZENER BZX55C30 30V 500MI0W
JL60	WIREBARE 22
JL80	0 OHM +0% 100MI0W
LB02	LF 32U0H +4% -4%
LL05	TF-DST TDS29 TBD 13
LL22	LF 650U0H +5% -5%
LL26	LL 26U5H +10%
RF05	RMF 1R0 OHM +1% 700MI0W
RL02	6K8 OHM +5% 100MI0W
RL03	4K75 OHM +1% 100MI0W
RL04	4K75 OHM +1% 100MI0W
RL05	4K75 OHM +1% 100MI0W
RL06	4K75 OHM +1% 100MI0W
RL19	15K0 OHM +5% 100MI0W
RL45	180K0 OHM +5% 100MI0W
RL48	100K0 OHM +5% 100MI0W
RL49	300K0 OHM +5% 100MI0W
RL65	4K7 OHM +5% 250MI0W
RV20	33K2 OHM +1% 250MI0W

TV ASY W56EGV023X015 56 01 TV ASY W66EGV023X015 66 00 TV ASY W78EGV023X015 (A) 00 Tube 16/9 24", 28", 32", SF / vectorgun	
10515530	TV PSD CT 17083 38
CL21	15N5F +3.5% -3.5% 1K6V
CL22	27N0F +5% -5% 400.0V
CL24	440N0F +5% -5% 250.0V
CL41	100P0F +10% -10% 50.0V
CL48	100N0F +5% 63.0V
CL51	290N0F +5% -5% 250.0V
DL48	D-SLP BAV103 200.0V
DL71	D-ZENER BZX55C24 24V 500MI0W
JL60	WIREBARE 22
JL82	0 OHM +0% 100MI0W
LB02	LF 32U0H +4% -4%
LL05	TF-DST TDS29 15314460 10
LL22	LF 650U0H +5% -5%
LL26	LL 30U5H 2519 A0
RF05	1R21 OHM +1% 700MI0W
RL02	4K99 OHM +1% 100MI0W
RL03	6K49 OHM +1% 100MI0W
RL04	6K49 OHM +1% 100MI0W
RL05	6K49 OHM +1% 100MI0W
RL06	2K37 OHM +1% 100MI0W
RL19	13K0 OHM +5% 100MI0W
RL45	390K0 OHM +5% 100MI0W
RL48	220K0 OHM +5% 100MI0W
RL49	180K0 OHM +5% 100MI0W
RL65	47K0 OHM +5% 250MI0W
RV20	100K0 OHM +1% 250MI0W

CONTROL MICROPROCESSOR - MICROPROCESSEUR DE COMMANDE - MIKROPROZESSOR - MICROPROCESSORE DEI COMANDI - MICROPROCESADOR DE LOS MANDOS

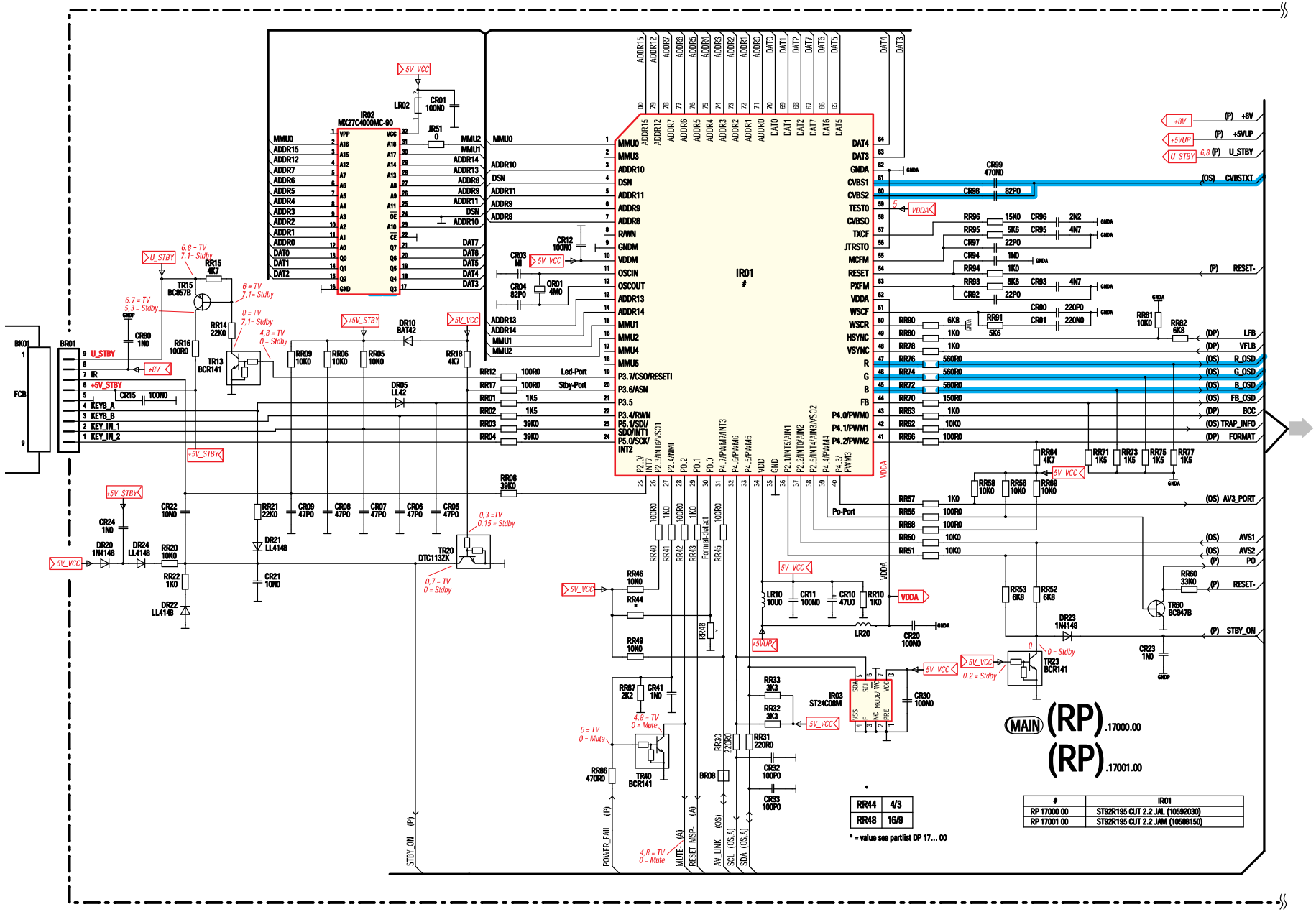

RF/FI/ SCART INTERFACE/VIDEO SIGNAL PROCESSING -HF/FI INTERFACE PERITELEVISION/TRAITEMENT LUMINANCE CHROMINANCE - HF/ZF/ SCART INTERFACE/VIDEO SIGNALVERARBEITUNG - RF/FI /PRESA PERITEL/ELABORAZIONE VIDEO - RF/FI /EUROCONECTOR / TRATAMENTO VIDEO

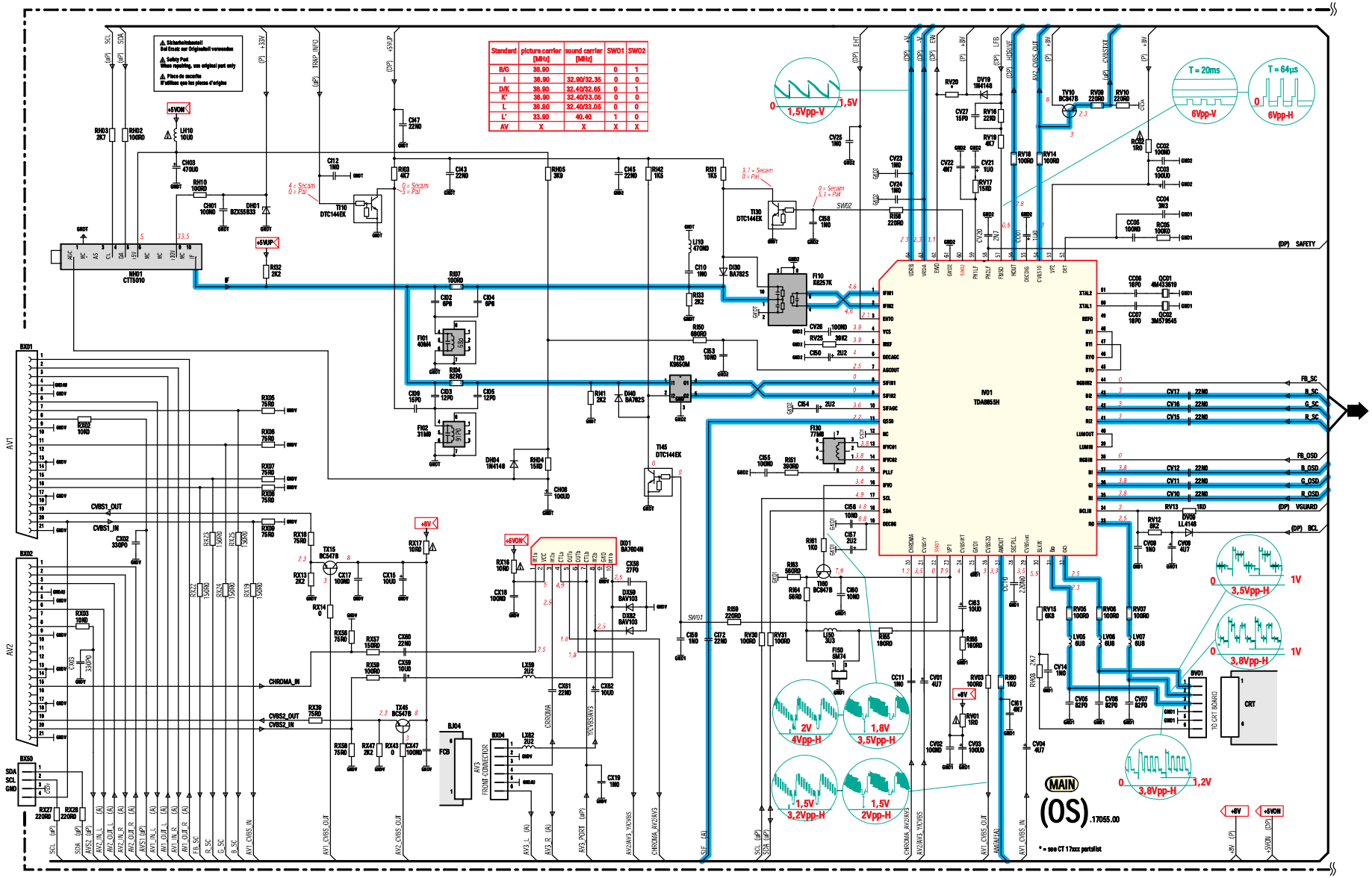

RF/FI/ SCART INTERFACE/VIDEO SIGNAL PROCESSING -HF/FI INTERFACE PERITELEVISION/TRAITEMENT LUMINANCE CHROMINANCE - HF/ZF/ SCART INTERFACE/VIDEO SIGNALVERARBEITUNG - RF/FI /PRESA PERITEL/ELABORAZIONE VIDEO - RF/FI /EUROCONECTOR/TRATAMENTO VIDEO

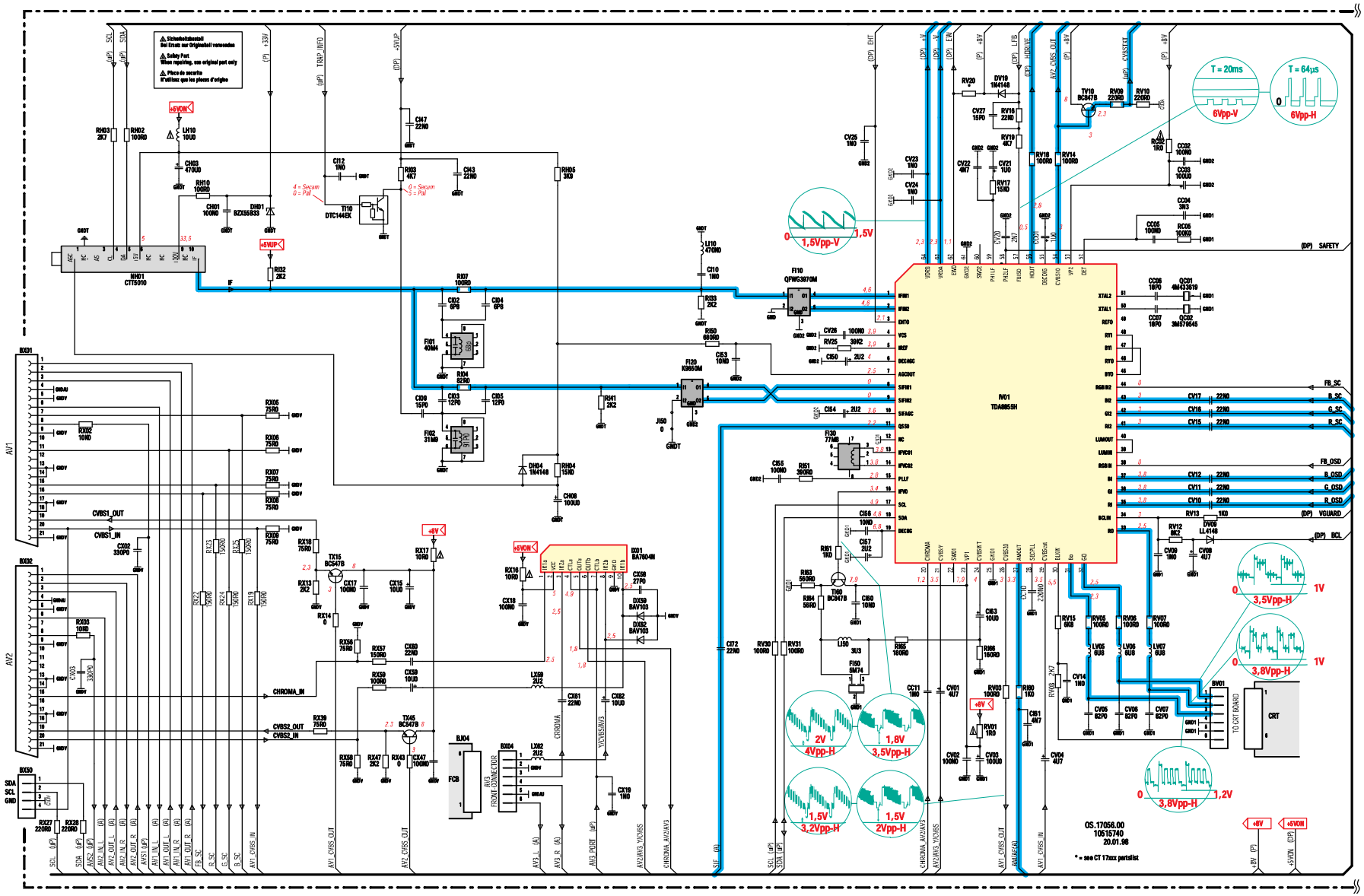

AMPLIFIER SCHEMATIC DIAGRAM - SCHEMA DE L'AMPLIFICATEUR - SCHALTBILD AUDIO-SIGNALVERABEITUNG - SCHEMA DELL' AMPLIFICATORE ESQUEMA DEL AMPLIFICADOR
(STEREO)

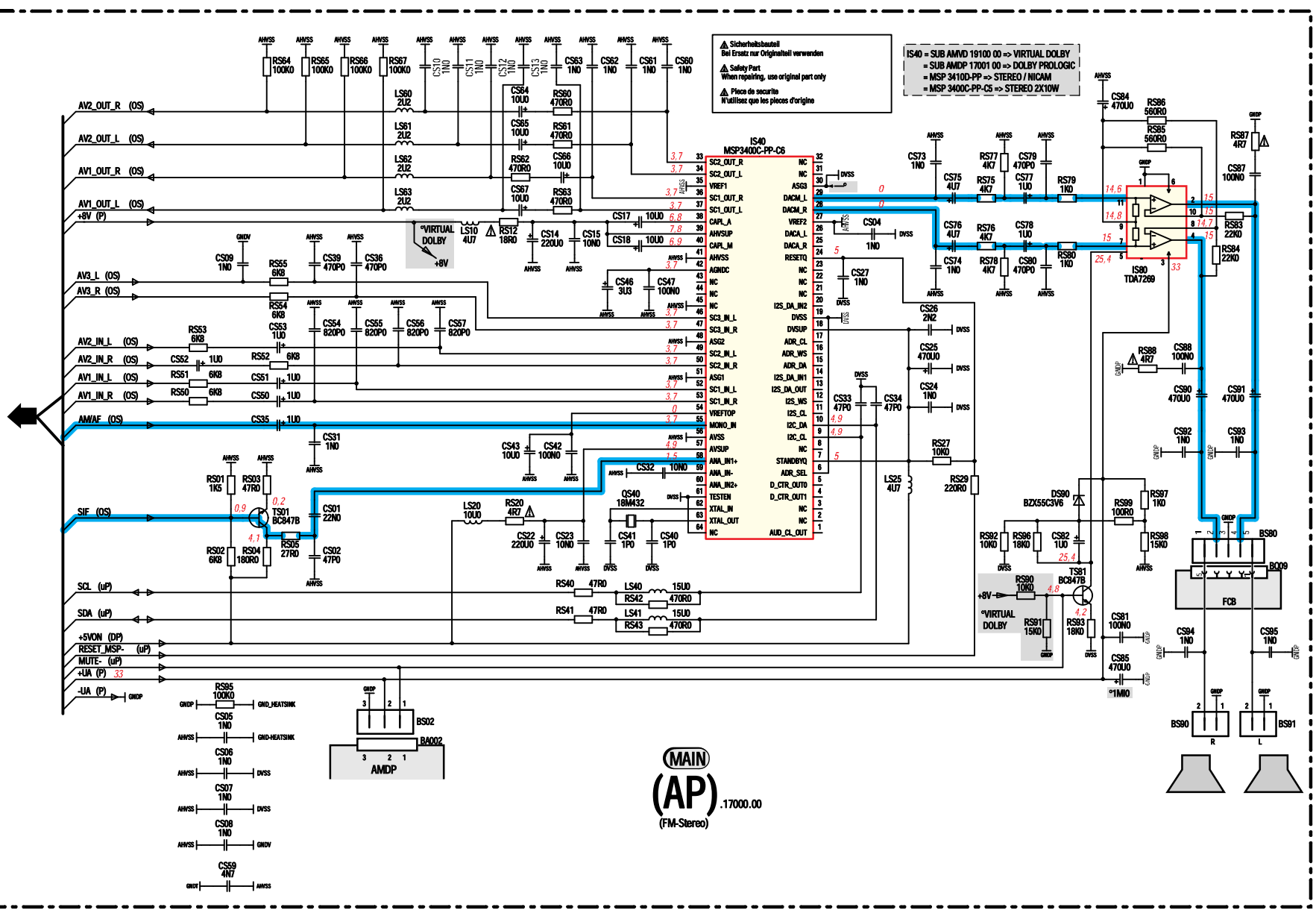

AMPLIFIER SCHEMATIC DIAGRAM - SCHEMA DE L'AMPLIFICATEUR - SCHALTBILD AUDIO-SIGNALVERABEITUNG - SCHEMA DELL' AMPLIFICATORE - ESQUEMA DEL AMPLIFICADOR
(MONO)

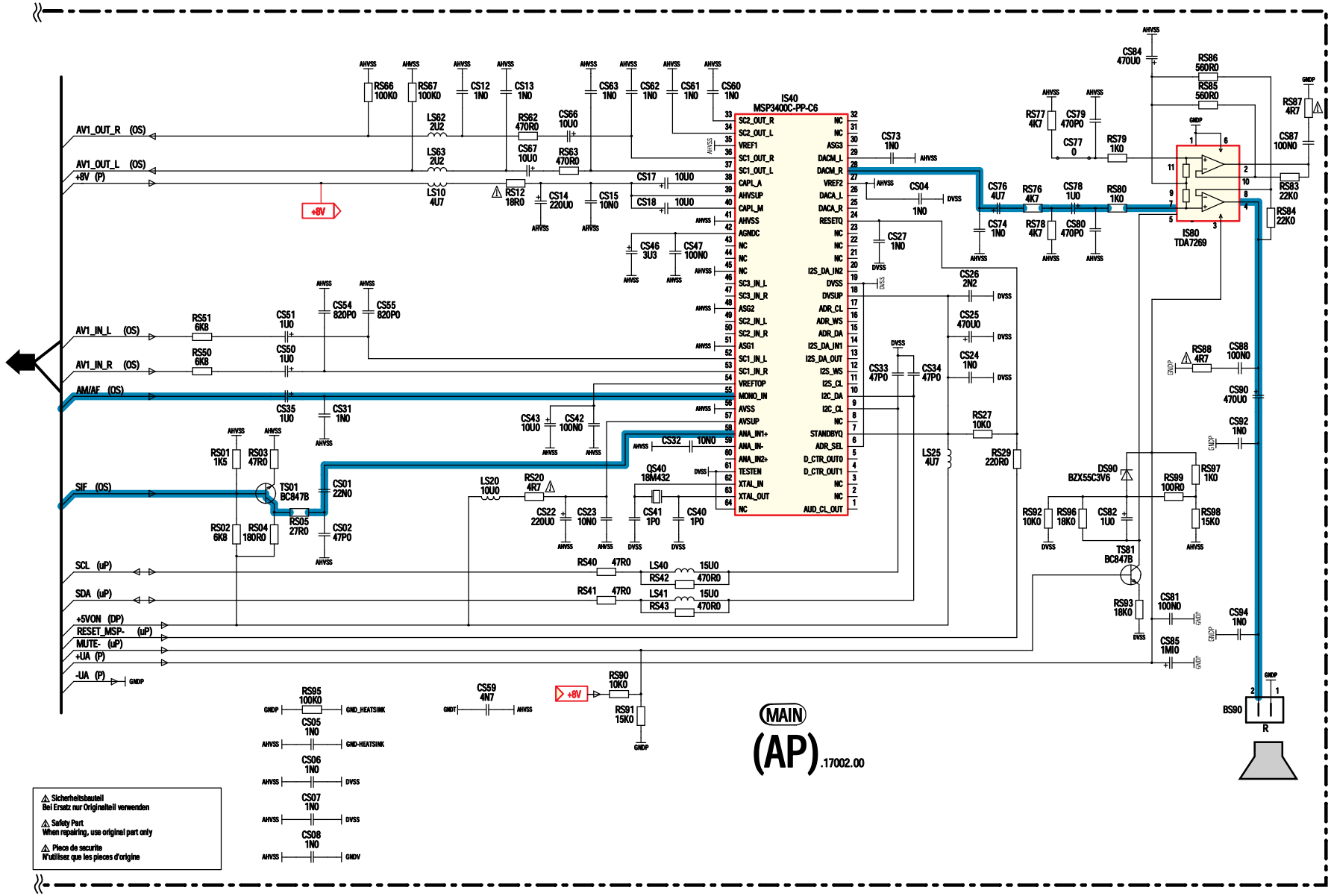

AUDIO SIGNAL MODULE DOLBY PROLOGIC - MODULE AUDIO DOLBY PROLOGIC - DOLBY PROLOGIC VERSTÄRKER - MODULO AUDIO DOLBY PROLOGIC
ESQUEMA DEL MÖDULO AMPLIFICADOR DE AUDIO

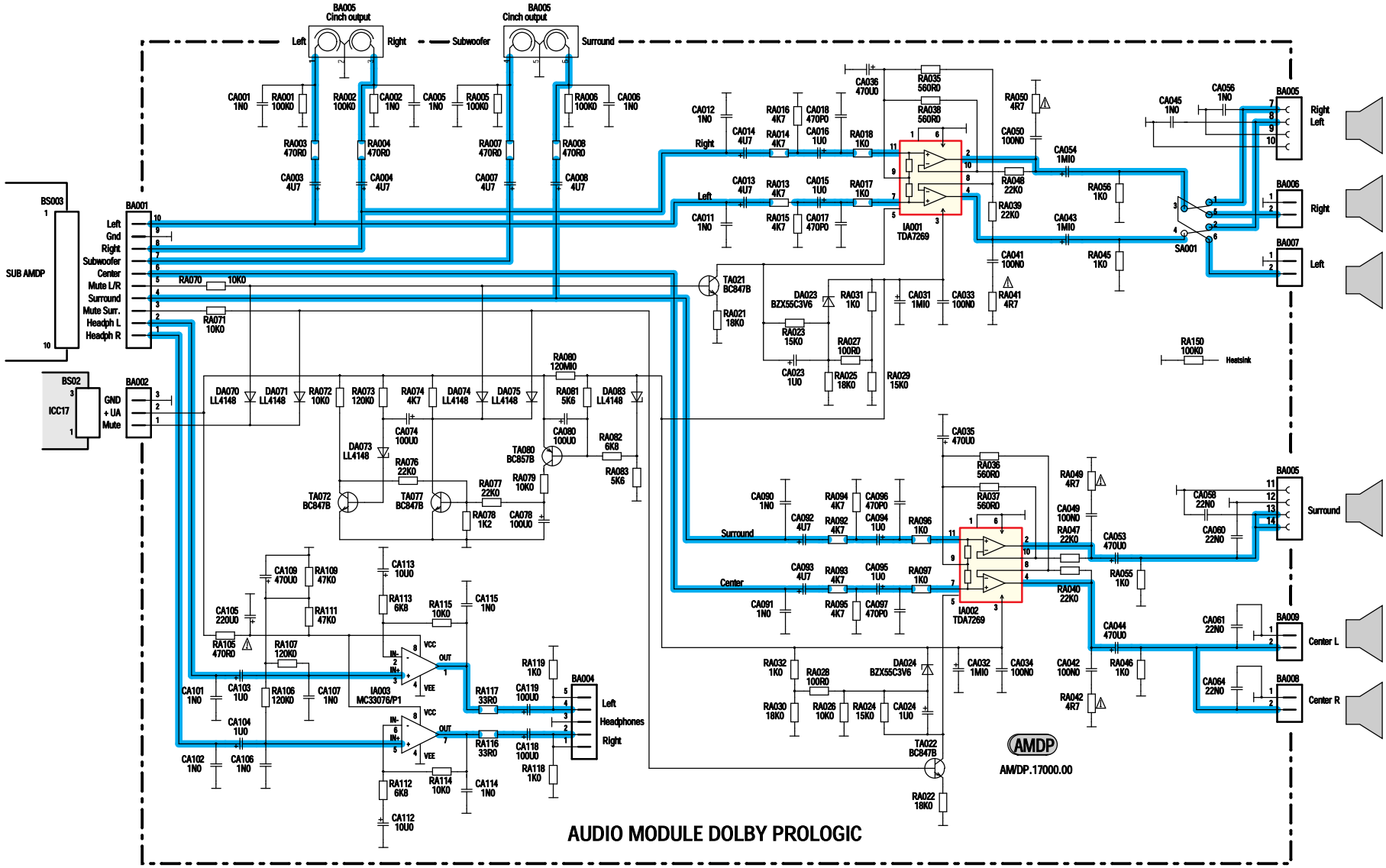

ICC17
First issue 07 / 98

SUB AUDIO SIGNAL MODULE - SUB MODULE AUDIO - AUDIO SIGNAL SUBMODUL - SUB MODULO AUDIO

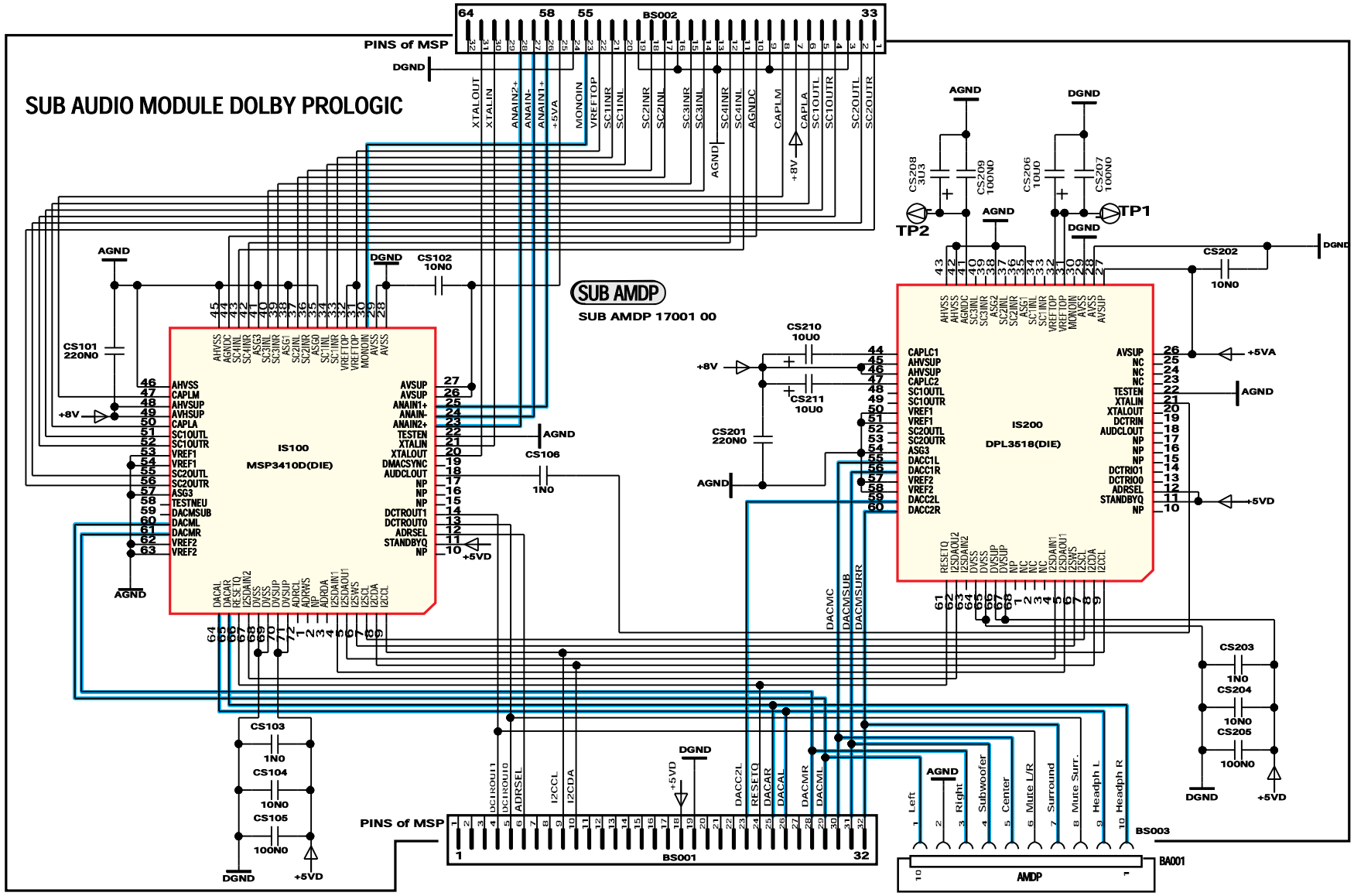

POWER SUPPLY - ALIMENTATION - NETZTEIL - ALIMENTAZIONE - ALIMENTACIÓN

(5) : standby

Note :
During measurements in the power supply unit
- Use the primary power unit ground (PGND).

Attention :
Mesure dans le bloc alimentation
- Utiliser la masse du bloc alimentation (PGND).

Achtung :
Bei Messungen im Primärnetzteil
- Primärnetzteilmasse verwenden (PGND).

Attenzione :
misure nell'alimentatore primario
- usare massa alimentazione primario (PGND).

Cuidado :
Medida en el bloque de alimentacion
- Utilizar la masa del bloque de alimentacion (PGND).

Part of board connected to mains supply.
Partie du châssis reliée au secteur.
Primärseite des Netzteils.
Parte dello châssis collegata alla rete.
Parte del chassis conectâr a la red.

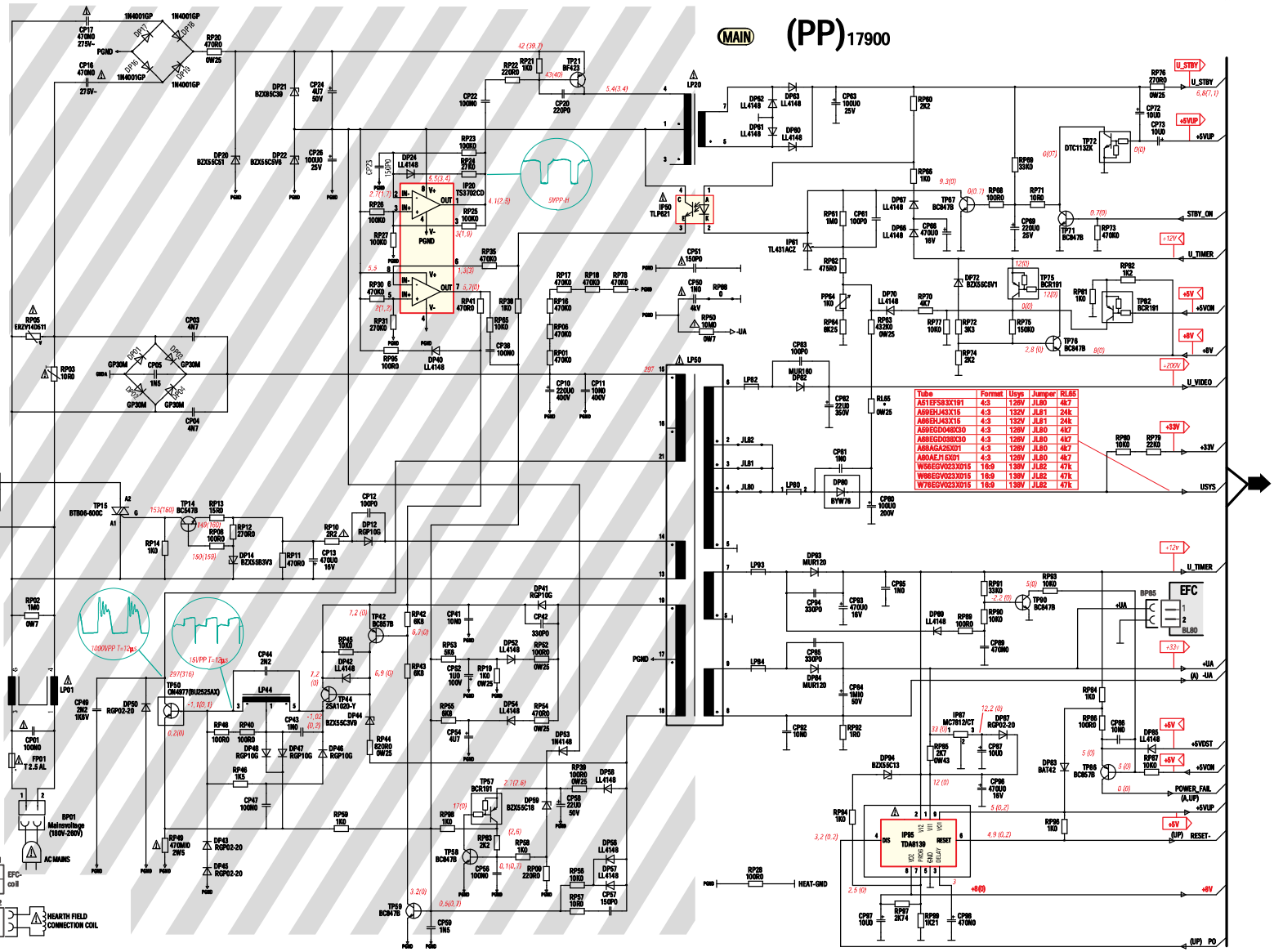

Tube	Format	Usys	Jumper	RL65
A51EF583X191	4:3	126V	JL80	4k7
A59EHJ43X16	4:3	132V	JL81	24k
A66EHJ43X16	4:3	132V	JL81	24k
A59EGD040X30	4:3	126V	JL80	4k7
A68EGD038X30	4:3	126V	JL80	4k7
A68AGA25X01	4:3	126V	JL80	4k7
A90AEJ15X01	4:3	126V	JL80	4k7
W56EGV023X015	16:9	138V	JL82	47k
W66EGV023X015	16:9	138V	JL82	47k
W76EGV023X015	16:9	138V	JL82	47k

⚠ Use isolating mains transformer - Utiliser un transformateur isolateur du secteur -Einen Trenntrafo verwenden
Utilizar un transformador aislador de red - Utilizzare un trasformatore per isolarvi dalla rete

SCANNING - BALAYAGE - ABLENKUNG - BARRIDO - SCANSIONE

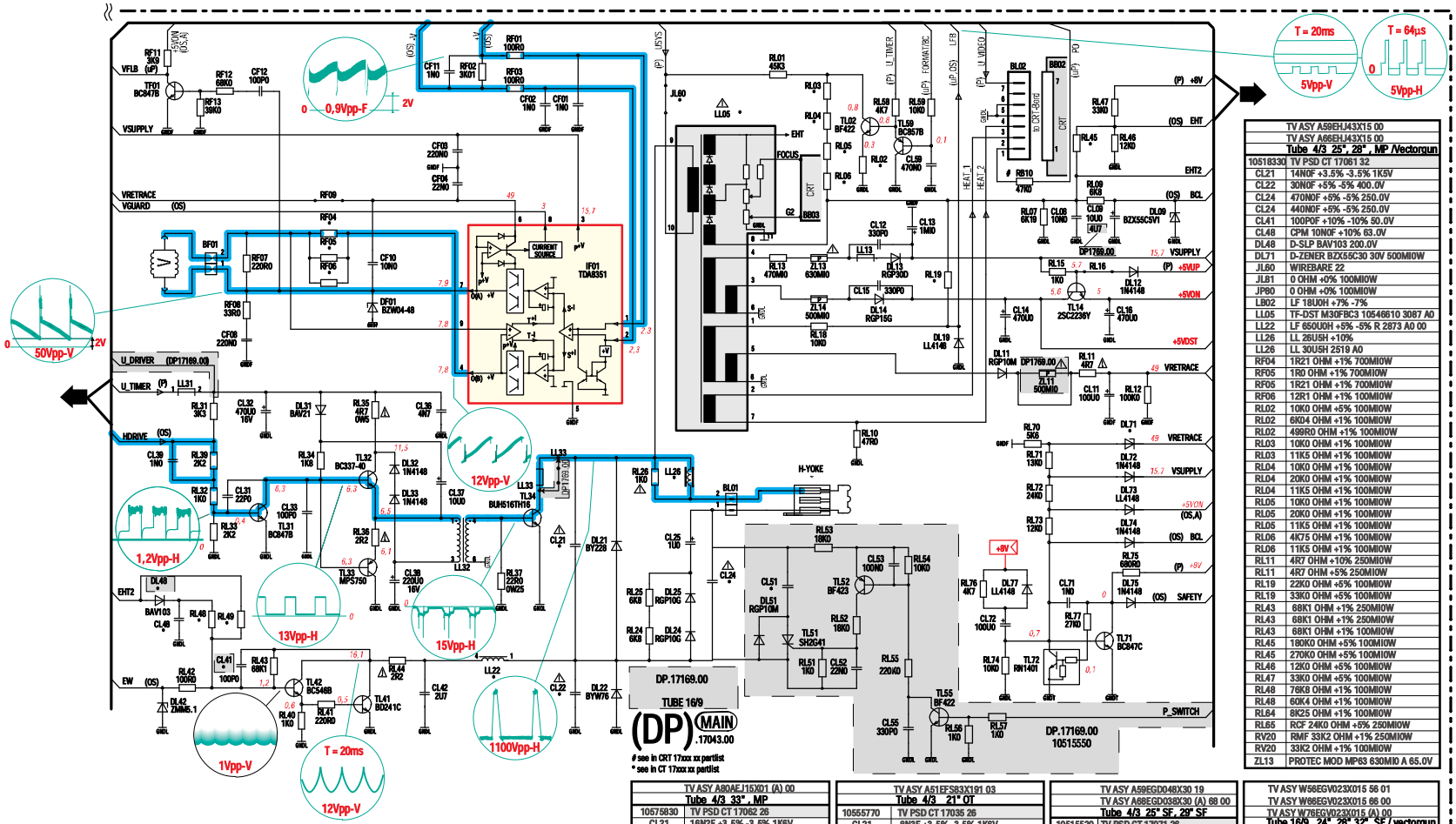

TV ASY A59EHJ43X15 00 TV ASY A66EHJ43X15 00 Tube 4/3 25", 28" , MP /Vectorgun	
10518330	TV PSD CT 17061 32
CL21	14N0F +3.5% -3.5% 1K6V
CL22	30N0F +5% -5% 400.0V
CL24	470N0F +5% -5% 250.0V
CL24	440N0F +5% -5% 250.0V
CL41	100P0F +10% -10% 50.0V
CL48	CPM 10N0F +10% 63.0V
DL48	D-SLP BAV103 200.0V
DL71	D-ZENER BZX55C30 30V 500MI0W
JL60	WIREBARE 22
JL81	0 OHM +0% 100MI0W
JP60	0 OHM +0% 100MI0W
LB02	LF 18U0H +7% -7%
LL05	TF-DST M30FBC3 10546610 3087 A0
LL22	LF 650U0H +5% -5% R 2873 A0 00
LL26	LL 26U5H +10%
LL26	LL 30U5H 2519 A0
RF04	1R21 OHM +1% 700MI0W
RF05	1R0 OHM +1% 700MI0W
RF05	1R21 OHM +1% 700MI0W
RF06	12R1 OHM +1% 100MI0W
RL02	10K0 OHM +5% 100MI0W
RL02	6K04 OHM +1% 100MI0W
RL02	499R0 OHM +1% 100MI0W
RL03	10K0 OHM +1% 100MI0W
RL03	11K5 OHM +1% 100MI0W
RL04	10K0 OHM +1% 100MI0W
RL04	20K0 OHM +1% 100MI0W
RL04	11K5 OHM +1% 100MI0W
RL05	10K0 OHM +1% 100MI0W
RL05	20K0 OHM +1% 100MI0W
RL05	11K5 OHM +1% 100MI0W
RL06	4K75 OHM +1% 100MI0W
RL06	11K5 OHM +1% 100MI0W
RL11	4R7 OHM +10% 250MI0W
RL11	4R7 OHM +5% 250MI0W
RL19	22K0 OHM +5% 100MI0W
RL19	33K0 OHM +5% 100MI0W
RL43	68K1 OHM +1% 250MI0W
RL43	68K1 OHM +1% 250MI0W
RL43	68K1 OHM +1% 100MI0W
RL45	180K0 OHM +5% 100MI0W
RL45	270K0 OHM +5% 100MI0W
RL46	12K0 OHM +5% 100MI0W
RL47	33K0 OHM +5% 100MI0W
RL48	76K8 OHM +1% 100MI0W
RL48	60K4 OHM +1% 100MI0W
RL64	8K25 OHM +1% 100MI0W
RL65	RCF 24K0 OHM +5% 250MI0W
RV20	RMF 33K2 OHM +1% 250MI0W
RV20	33K2 OHM +1% 100MI0W
ZL13	PROTEC MOD MP63 630MI0 A 65.0V

⚠ Indicates critical safety components, and identical components should be used for replacement. Only then can the operational safety be garanteed.

Le remplacement des éléments de sécurité (repérés avec le symbole ⚠) par des composants non homologués selon la Norme CEI 65 entraine la non-conformité de l'appareil.
Dans ce cas, la responsabilité du fabricant n'est plus engagée.

Wenn Sicherheitsteile (mit dem Symbol ⚠ gekennzeichnet) durch nicht normgerechte Teile ersetzt werden, erlischt die Haftung des Herstellers.

La sostituzione degli elementi di sicurezza (contrassegnati con il segno ⚠) con componenti non omologati secondo la norma CEI 65 comporta la non conformitá dell'apparecchio.
In tal caso é "esclusa la responsabilità" del costruttore.

La subtitución de elementos de seguridad (marcados con el simbolo ⚠) por componentes no homologados segun la norma CEI 65, provoca la no conformidad del aparato.
En ese caso, el fabricante cesa de ser responsable.

TV ASY A80AEJ15X01 (A) 00 Tube 4/3 33" , MP	
10575830	TV PSD CT 17062 26
CL21	16N2F +3.5% -3.5% 1K6V
CL22	30N0F +5% -5% 400.0V
CL24	560N0F +5% -5% 250.0V
CL41	100P0F +10% -10% 50.0V
CL48	10N0F +10% 63.0V
DL48	D-SLP BAV103 200.0V
DL71	D-ZENER BZX55C30 30V 500MI0W
JL60	WIREBARE 22
JL80	0 OHM +0% 100MI0W
LB02	LF 32U0H +4% -4%
LL05	TF-DST TDS29 TBD 11
LL22	LF 650U0H +5% -5% R 2873 A0 00
LL26	LL 26U5H +10%
RF05	1R21 OHM +1% 700MI0W
RF06	10R0 OHM +1% 100MI0W
RL02	6K04 OHM +1% 100MI0W
RL03	4K75 OHM +1% 100MI0W
RL04	4K75 OHM +1% 100MI0W
RL05	4K75 OHM +1% 100MI0W
RL06	6K81 OHM +1% 100MI0W
RL19	13K0 OHM +5% 100MI0W
RL45	150K0 OHM +5% 100MI0W
RL48	76K8 OHM +1% 100MI0W
RL49	560K0 OHM +5% 100MI0W
RL65	RCF 4K7 OHM +5% 250MI0W
RV20	RMF 23K7 OHM +1% 250MI0W

TV ASY A51FS83X191 03 Tube 4/3 21" OT	
10555770	TV PSD CT 17035 26
CL21	8N3F +3.5% -3.5% 1K6V
CL22	33N0F +5% -5% 1K0V
CL24	440N0F +5% -5% 250.0V
CL41	1N0F +10% -10% 50.0V
DL71	D-ZENER BZX55C24 24V 500MI0W
JL60	WIREBARE 22
JL80	0 OHM +0% 100MI0W
LB02	LF 18U0H +7% -7%
LL05	TF-DST M30FBC3 10555640 3087 A0
LL22	LF 650U0H +5% -5% R 2873 A0 00
LL26	LL 85U0H 2519 A0
RF05	1R5 OHM +1% 700MI0W
RF06	10R0 OHM +1% 100MI0W
RL02	6K04 OHM +1% 100MI0W
RL03	10K0 OHM +1% 100MI0W
RL04	10K0 OHM +1% 100MI0W
RL05	10K0 OHM +1% 100MI0W
RL06	3K32 OHM +1% 100MI0W
RL45	110K0 OHM +5% 100MI0W
RL49	60K4 OHM +1% 100MI0W
RL65	4K7 OHM +5% 250MI0W
RV20	23K7 OHM +1% 250MI0W

TV ASY A59EGD048X30 19 TV ASY A68EGD038X30 (A) 68 00 Tube 4/3 25" SF, 29" SF	
10515520	TV PSD CT 17071 26
CL21	16N2F +3.5% -3.5% 1K6V
CL22	30N0F +5% -5% 400.0V
CL24	510N0F +5% -5% 250.0V
CL41	100P0F +10% -10% 50.0V
CL48	10N0F +10% 63.0V
DL48	D-SLP BAV103 200.0V
DL71	D-ZENER BZX55C30 30V 500MI0W
JL60	WIREBARE 22
JL80	0 OHM +0% 100MI0W
LB02	LF 32U0H +4% -4%
LL05	TF-DST TDS29 TBD 13
LL22	LF 650U0H +5% -5%
LL26	LL 26U5H +10%
RF05	RMF 1R0 OHM +1% 700MI0W
RL02	6K8 OHM +5% 100MI0W
RL03	4K75 OHM +1% 100MI0W
RL04	4K75 OHM +1% 100MI0W
RL05	4K75 OHM +1% 100MI0W
RL06	4K75 OHM +1% 100MI0W
RL19	15K0 OHM +5% 100MI0W
RL45	180K0 OHM +5% 100MI0W
RL48	100K0 OHM +5% 100MI0W
RL49	300K0 OHM +5% 100MI0W
RL65	4K7 OHM +5% 250MI0W
RV20	33K2 OHM +1% 250MI0W

TV ASY W56EGV023X015 56 01 TV ASY W66EGV023X015 66 00 TV ASY W78EGV023X015 (A) 00 Tube 16/9 24", 28", 32", SF / vectorgun	
10515530	TV PSD CT 17083 38
CL21	15N5F +3.5% -3.5% 1K6V
CL22	27N0F +5% -5% 400.0V
CL24	440N0F +5% -5% 250.0V
CL41	100P0F +10% -10% 50.0V
CL48	100N0F +5% 63.0V
CL51	290N0F +5% -5% 250.0V
DL48	D-SLP BAV103 200.0V
DL71	D-ZENER BZX55C24 24V 500MI0W
JL60	WIREBARE 22
JL82	0 OHM +0% 100MI0W
LB02	LF 32U0H +4% -4%
LL05	TF-DST TDS29 15314460 10
LL22	LF 650U0H +5% -5%
LL26	LL 30U5H 2519 A0
RF05	1R21 OHM +1% 700MI0W
RL02	4K99 OHM +1% 100MI0W
RL03	6K49 OHM +1% 100MI0W
RL04	6K49 OHM +1% 100MI0W
RL05	6K49 OHM +1% 100MI0W
RL06	2K37 OHM +1% 100MI0W
RL19	13K0 OHM +5% 100MI0W
RL45	390K0 OHM +5% 100MI0W
RL48	220K0 OHM +5% 100MI0W
RL49	180K0 OHM +5% 100MI0W
RL65	47K0 OHM +5% 250MI0W
RV20	100K0 OHM +1% 250MI0W

CONTROL MICROPROCESSOR - MICROPROCESSEUR DE COMMANDE - MIKROPROZESSOR - MICROPROCESSORE DEI COMANDI - MICROPROCESADOR DE LOS MANDOS

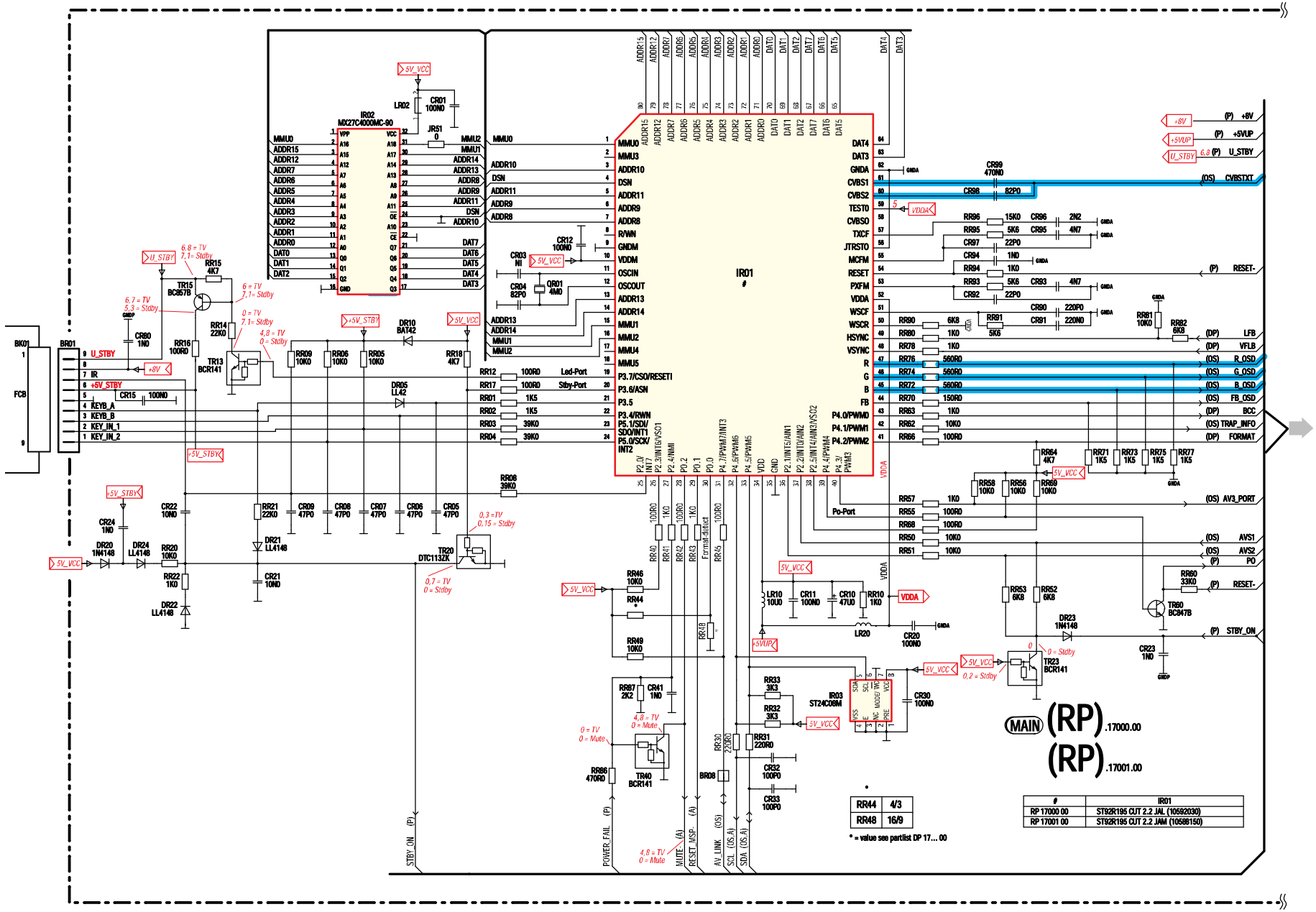

RF/FI/ SCART INTERFACE/VIDEO SIGNAL PROCESSING -HF/FI INTERFACE PERITELEVISION/TRAITEMENT LUMINANCE CHROMINANCE - HF/ZF/ SCART INTERFACE/VIDEO SIGNALVERARBEITUNG - RF/FI /PRESA PERITEL/ELABORAZIONE VIDEO - RF/FI /EUROCONECTOR / TRATAMENTO VIDEO

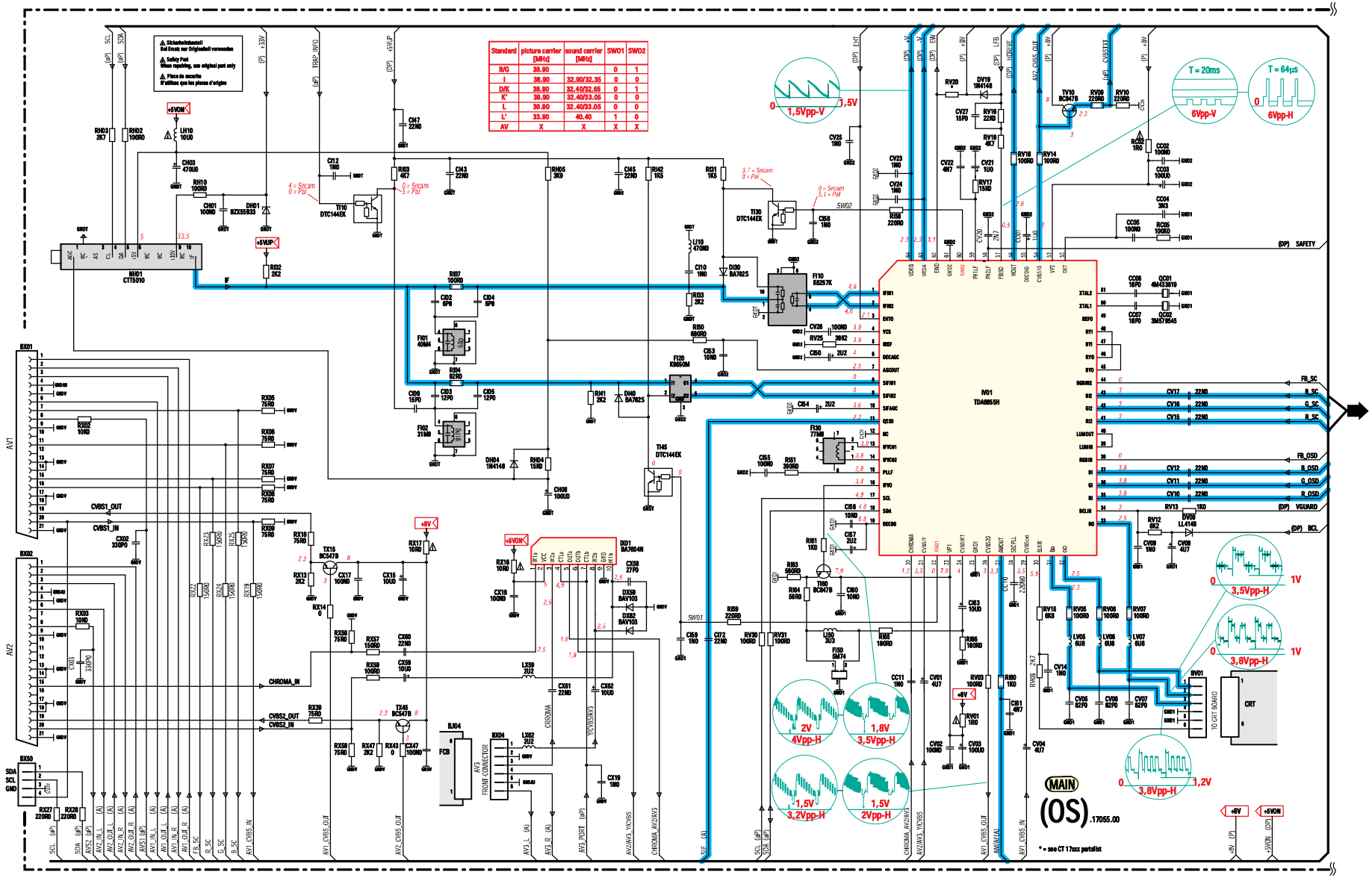

RF/FI/ SCART INTERFACE/VIDEO SIGNAL PROCESSING -HF/FI INTERFACE PERITELEVISION/TRAITEMENT LUMINANCE CHROMINANCE - HF/ZF/ SCART INTERFACE/VIDEO SIGNALVERARBEITUNG - RF/FI /PRESA PERITEL/ELABORAZIONE VIDEO - RF/FI /EUROCONECTOR/TRATAMENTO VIDEO

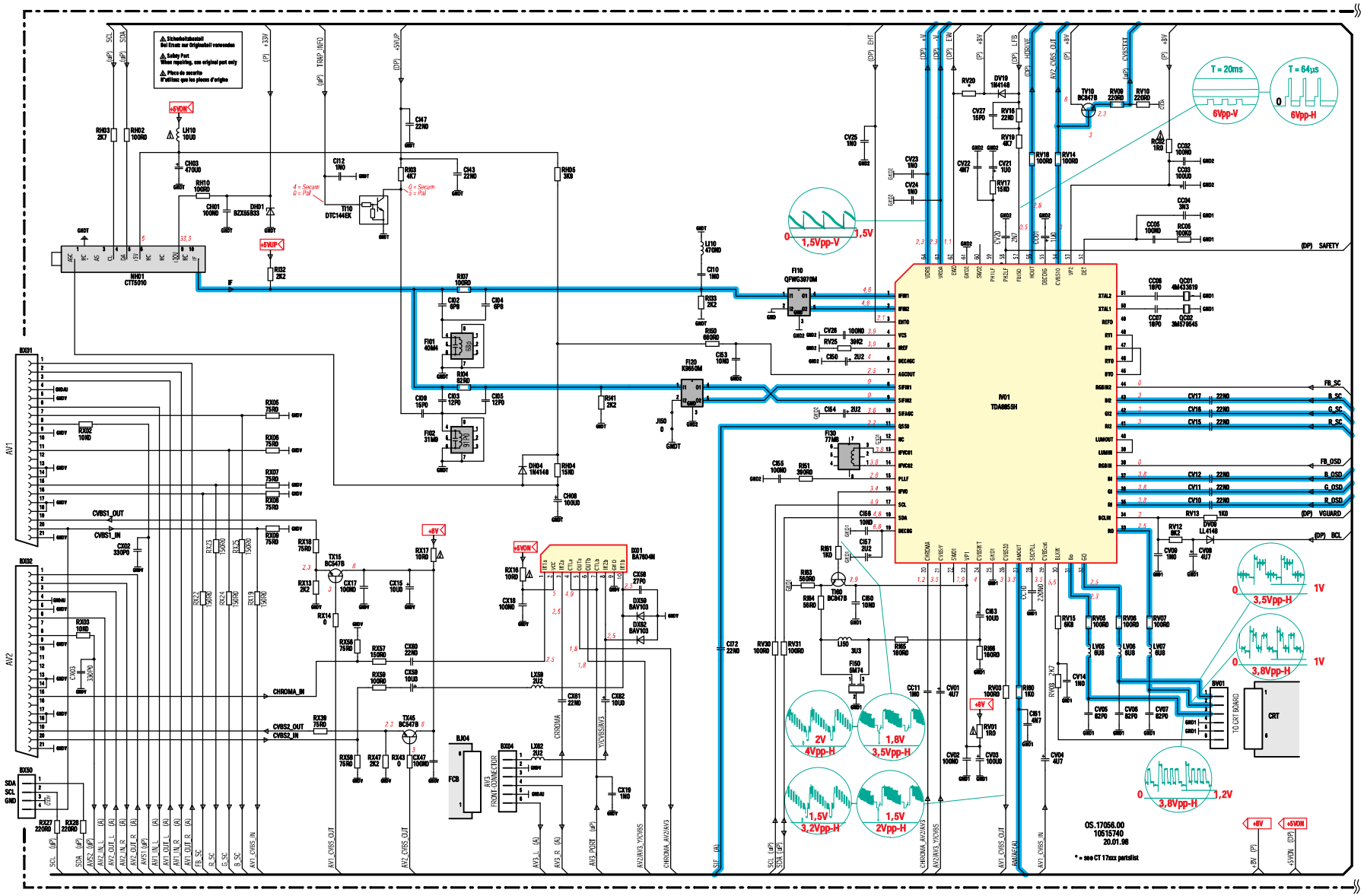

AMPLIFIER SCHEMATIC DIAGRAM - SCHEMA DE L'AMPLIFICATEUR - SCHALTBILD AUDIO-SIGNALVERABEITUNG - SCHEMA DELL' AMPLIFICATORE ESQUEMA DEL AMPLIFICADOR
(STEREO)

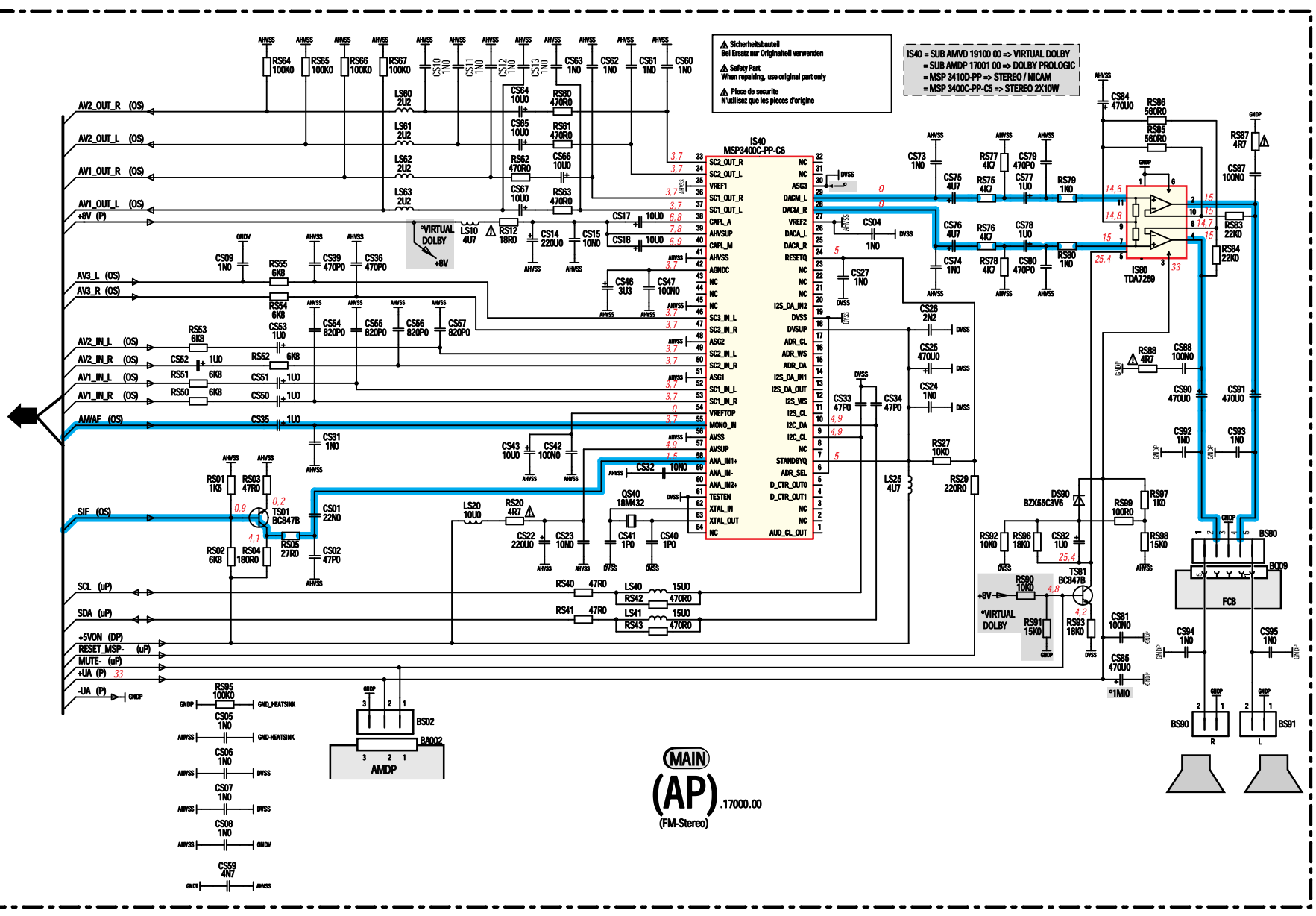

AMPLIFIER SCHEMATIC DIAGRAM - SCHEMA DE L'AMPLIFICATEUR - SCHALTBILD AUDIO-SIGNALVERABEITUNG - SCHEMA DELL' AMPLIFICATORE - ESQUEMA DEL AMPLIFICADOR
(MONO)

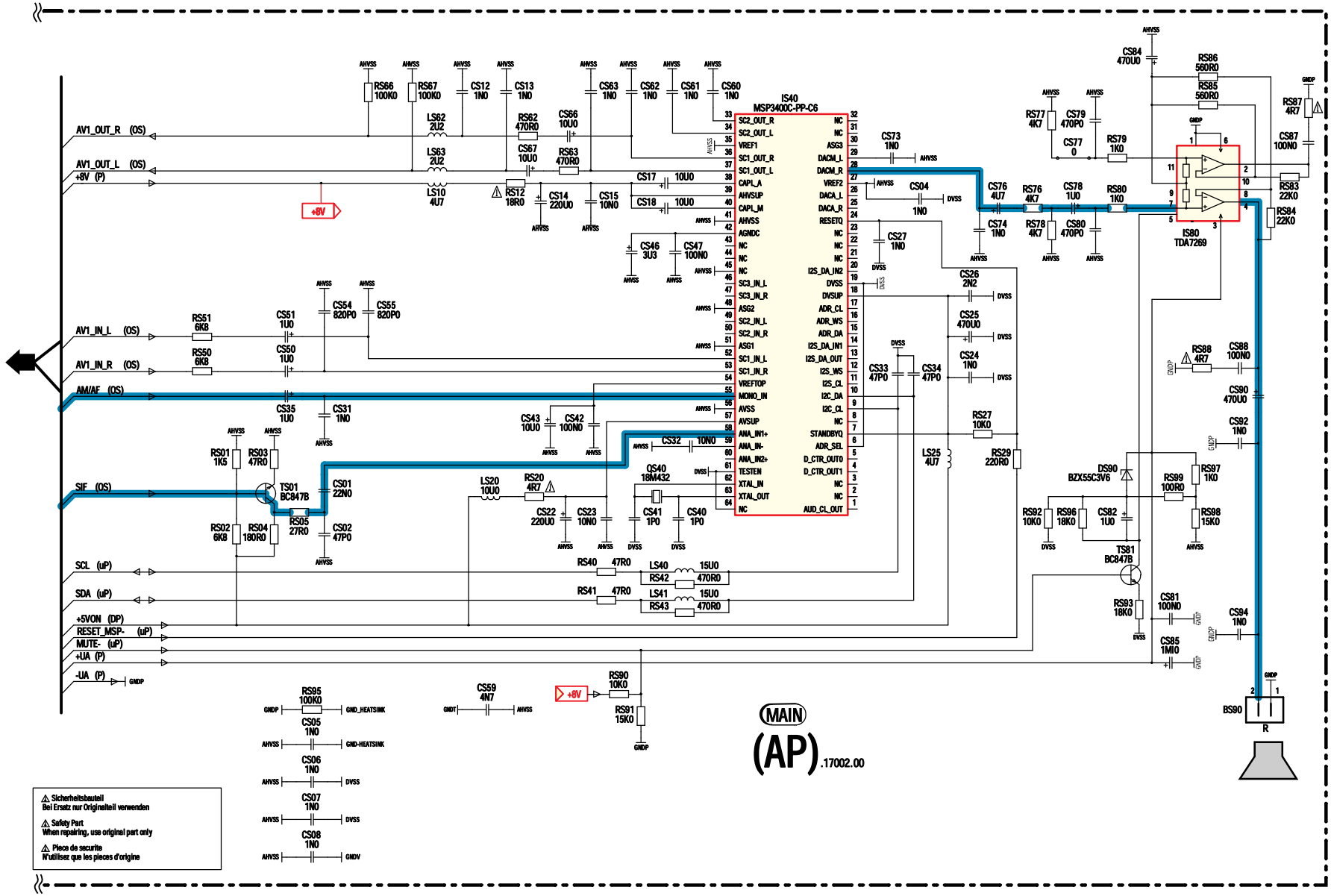

VHF / UHF TUNER CTT5010

(For information only)

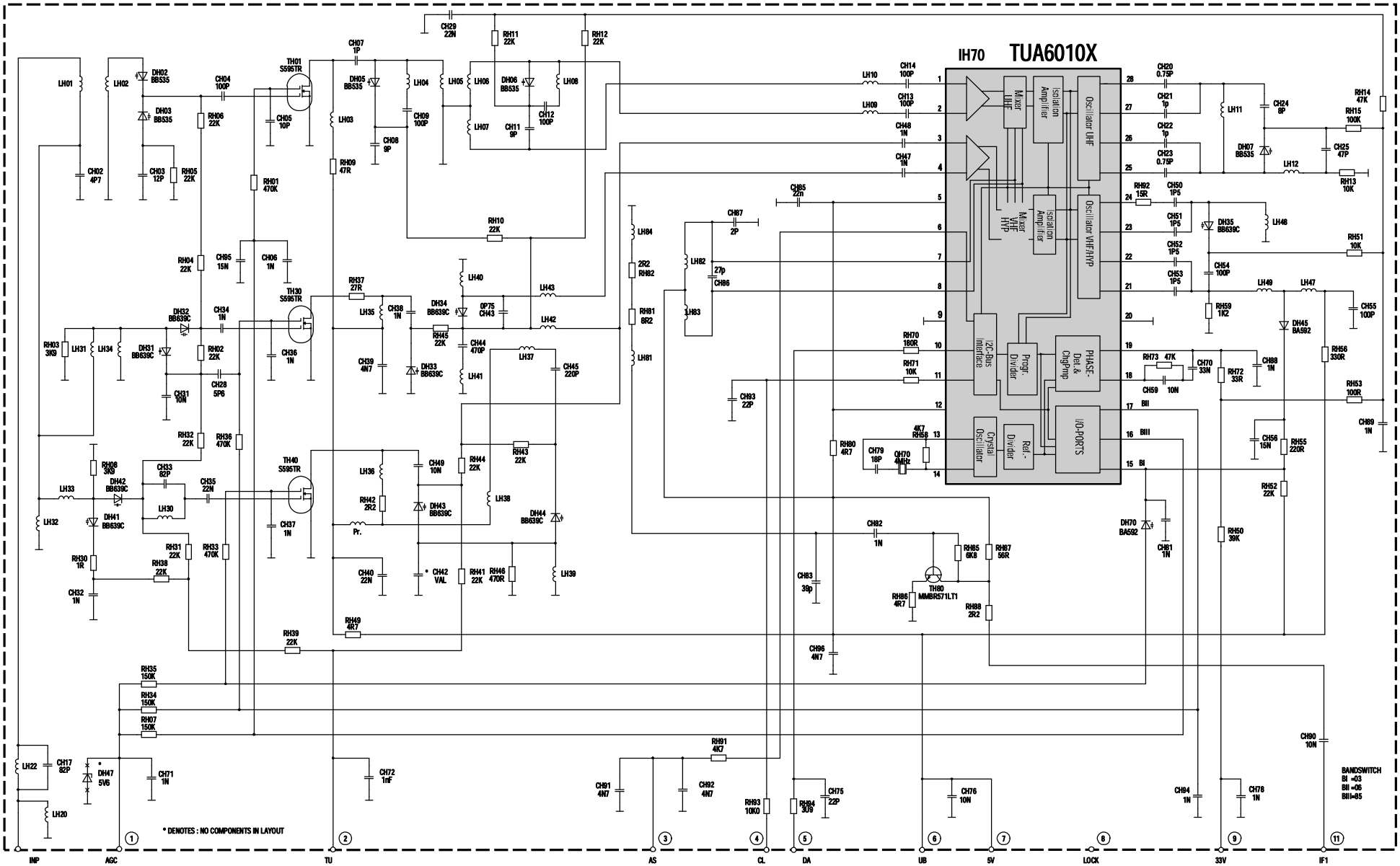

ICC17

First issue 07 / 98

LOCATION OF CONTROLS - EMPLACEMENT DES REGLAGES - SERVICE LAGEPLAN - POSIZIONE REGOLATORI DI SERVIZIO - SITUACIÓN DE LOS AJUSTES

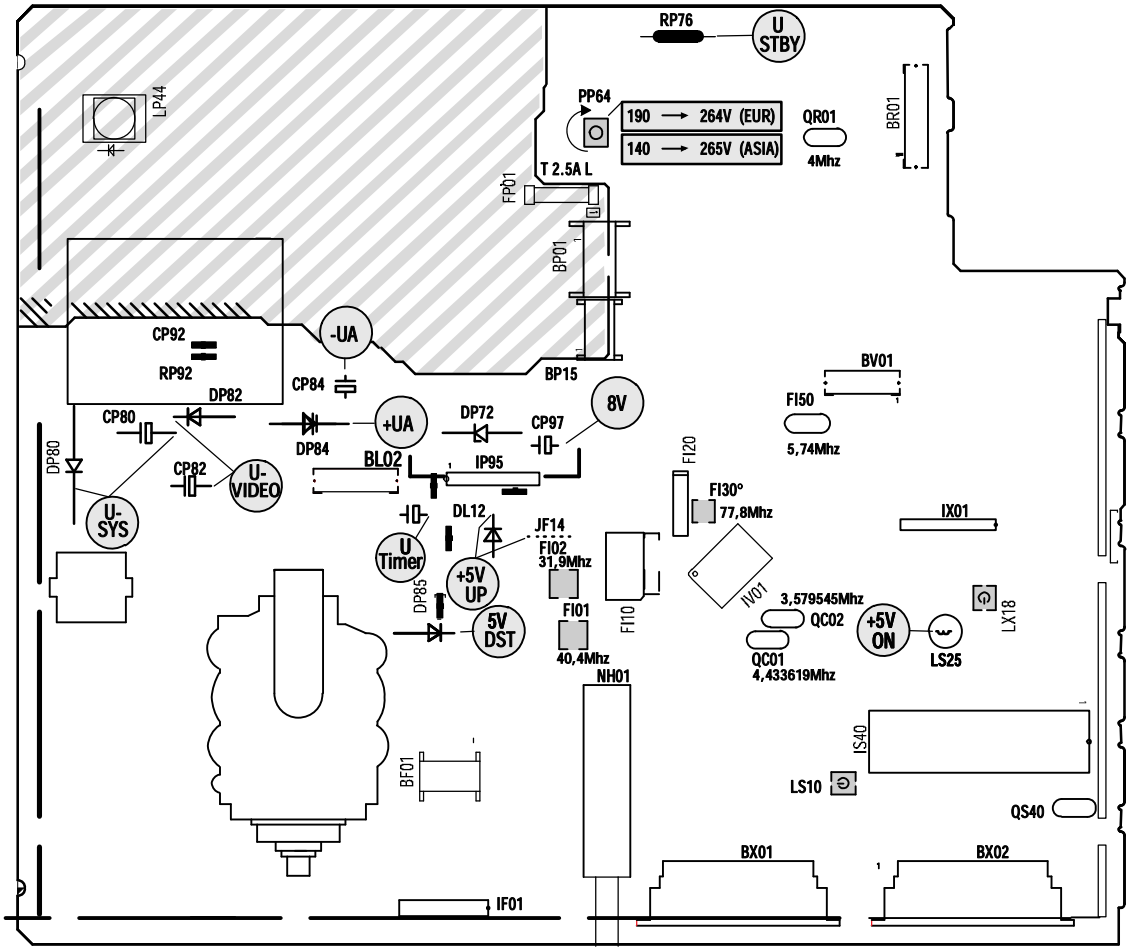

° it is not necessary , to adjust FI30 by after sales

Part of board connected to mains supply.
Partie du châssis reliée au secteur.
Primärseite des Netzteils.
Parte dello châssis collegata alla rete.
Parte del chassis conectada a la red.

⚠ Use isolating mains transformer -
Utiliser un transformateur isolateur du secteur -
Trenntrafo verwenden -
Utilizar un transformador aislador de red -
Utilizzare un trasformatore per isolarvi dalla rete

ADJUSTMENTS - REGLAGES - EINSTELLUNGEN - REGOLAZIONI - AJUSTES

<table>
<tr>
<td>U Sys</td>
<td>PP 64</td>
<td>+ + = 50%</td>
<td> 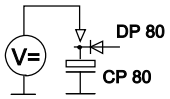
</td>
<td>
<table>
<tr><th>Tube</th><th>Format</th><th>Usys</th><th>Jumper</th><th>RL65</th></tr>
<tr><td>A51EFS83X191</td><td>4:3</td><td>126V+/-0,5V</td><td>JL80</td><td>4k7</td></tr>
<tr><td>A59EHJ43X15</td><td>4:3</td><td>132V+/-0,5V</td><td>JL81</td><td>24k</td></tr>
<tr><td>A66EHJ43X15</td><td>4:3</td><td>132V+/-0,5V</td><td>JL81</td><td>24k</td></tr>
<tr><td>A59EGD048X30</td><td>4:3</td><td>126V+/-0,5V</td><td>JL80</td><td>4k7</td></tr>
<tr><td>A68EGD038X30</td><td>4:3</td><td>126V+/-0,5V</td><td>JL80</td><td>4k7</td></tr>
<tr><td>A68AGA25X01</td><td>4:3</td><td>126V+/-0,5V</td><td>JL80</td><td>4k7</td></tr>
<tr><td>A80AEJ15X01</td><td>4:3</td><td>126V+/-0,5V</td><td>JL80</td><td>4k7</td></tr>
<tr><td>W56EGV023X015</td><td>16:9</td><td>138V+/-0,5V</td><td>JL82</td><td>47k</td></tr>
<tr><td>W66EGV023X015</td><td>16:9</td><td>138V+/-0,5V</td><td>JL82</td><td>47k</td></tr>
<tr><td>W76EGV023X015</td><td>16:9</td><td>138V+/-0,5V</td><td>JL82</td><td>47k</td></tr>
</table>
</td>
</tr>
<tr>
<td rowspan="2">IF Alignment
Alignement FI</td>
<td>trap 40,4Mhz
FI 01</td>
<td rowspan="2">Switch set to standard BG
Commuter le TV au standard BG

IF Signal
40,4MHz (BG)
31,9MHz (BG)
TUNER
50 mV
1nF
11
75Ω
NH01</td>
<td> 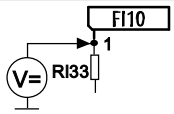
</td>
<td>Adjust FI01 for minimum value at 40,4Mhz</td>
</tr>
<tr>
<td>trap 31,9Mhz
FI 02</td>
<td> 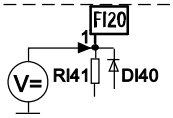
</td>
<td>Adjust FI20 for minimum value at 31,9Mhz</td>
</tr>
<tr>
<td>U G2 / cutoff</td>
<td>SCREEN</td>
<td>+ + = 50%

AV (no Signal, black screen)</td>
<td> 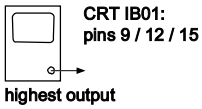
</td>
<td> 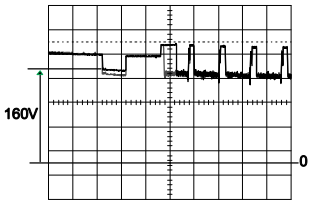
</td>
</tr>
<tr>
<td>FOCUS</td>
<td>FOCUS
LL05</td>
<td>Test pattern
(standard values)</td>
<td> </td>
<td>Sharp picture</td>
</tr>
</table>

SERVICE MODE (GB)

MODE SERVICE (F)

I - ENTER/EXIT SERVICE MODE - ENTREE/SORTIE DU MODE SERVICE

1 ACCESSING THE SERVICE MODE

TV Control Panel Access

- Switch the TV into **"Standby"** mode by pressing the Standby button on the RCU.
- Switch **"OFF"** the mains supply to the TV and wait for the LED to extinguish.
- Whilst holding depressed the **PR -** and **VOL-** (8s), switch **"ON"** the mains supply to the TV.
- Once initialised, the **Main Service Menu** will appear on the screen of the TV.

```
Soft-Ver.   V1.00-0     0080
Config.     A5- - - -N
Serial-No.  103465071

 QUIT
 TUBE
 SETUP
 GEOMETRY
 VIDEO
 IF
```

Please Note:

In the service mode :
- *The CHILD LOCK function is re-initialised.The LOCK function (PIN number) is ignored.*
- *All Wake-up/Sleep timer settings are CLEARED.*
- *SCART socket pin 8 switching voltages are ignored.*
- *AV-Link, WSS Detection, EPG and TELETEXT functions are disabled.*
- *Automatic standby mode switching functions (no signal conditions) are disabled.*
- *Brightness, Colour and Contrast are set to factory defaults.*
- *Sharpness settings are set to MID position.*
- *Contrast Expand is set to LOW.*
- *Automatic INSTALL mode is disabled.*
- *FORMAT and ZOOM are reset to factory defaults.*

1 ACCES AU MODE SERVICE

Accès avec le clavier du téléviseur

- Commuter le téléviseur en position de veille avec la télécommande. Eteindre le téléviseur par l'interrupteur secteur (attendre l'extinction complète du voyant).
- Tout en appuyant sur les touches **PR -** et **VOL -** , mettre le TV en service à l'aide de la touche **M/A**.
- Maintenir enfoncées les touches **PR -** et **VOL -**. (8s) Le menu suivant apparaît.

```
Soft-Ver.   V1.00-0     0080
Config.     A5- - - -N
Serial-No.  103465071

 QUIT
 TUBE
 SETUP
 GEOMETRY
 VIDEO
 IF
```

Note :

En mode service:
- *Le verrouillage parental est effacé (réinitialisé).*
- *La fonction de verrouillage (Pin number) est ignorée.*
- *La programmation des heures «reveille/matin» est annulée.*
- *Possibilité de passer en mode service avec commutation lente active.*
- *AV- Link , la détection WSS, l'EPG et le Vidéotexte ne sont pas validés.*
- *La fonction de stand-by automatique en cas d'absence de signal d'antenne n'est pas validée.*
- *Les valeurs de réglages usine sont affectées au contraste, à la couleur et à la lumière.*
- *Le contour est appelé à sa valeur moyenne.*
- *L'expansion contraste est au niveau bas.*
- *Le mode ambiance «Light sensor» n'est pas valides.*
- *Zoom et format ignorées.*

2 TEMPORARY EXIT FROM SERVICE MODE

- Press the **"EXIT"** button on the RCU.
- Pressing the **"MENU"** button on the RCU will activate the customer menus.

- The Service Menu can be re-entered by pressing the "BLUE" button on the RCU.

2 SORTIE TEMPORAIRE DU MODE SERVICE

- Utiliser la touche Exit de la télécommande.
- Le menu utilisateur peut être accessible via la touche «Menu».

- Pour entrer à nouveau dans le mode service utiliser la touche bleue.

3 EXITING FROM SERVICE MODE

Remote Control

- Select the **"QUIT"** line of the **"Main Service Menu"**.
- Press «<», «OK» or «>» button

TV Control Panel

- Press «VOL.+»button

ON/OFF key or "Stand-by" buttons

- RCU **"Standby"** button or switch **"OFF"** mains supply.

- TV mode.

*Values or adjustment not "**STORED**" before exiting the service mode will **NOT** be "**SAVED**" in the NVM.*

3 SORTIE DEFINITIVE DU MODE SERVICE

télécommande

- Aller au point «QUIT» dans le menu principal du mode service.
- Appuyer sur «<», «OK» ou «>»

clavier du téléviseur

-Appuyer sur «VOL+»

Inter M/A ou Stand-by

- Foncion Stand-by ou «off» par M/A

- Mode TV.

Les valeurs ou réglages non mémorisées avant la sortie ne seront pas écrites en NVM.

II - NAVIGATION INSIDE THE SERVICE MODE - DEPLACEMENT DANS LE MODE SERVICE FUNCTIONS WALLIN SERVICE MODE - OPZIONI NEL SERVICE MODE - BUSQUEDA EN MODO SERVICIO

1 REMOTE CONTROL - TELECOMMANDE - FERNBEDIENUNG TELECOMANDO - MANDO A DISTANCIA

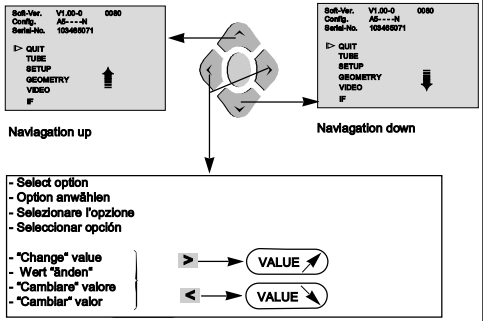

2 TV CONTROL PANEL - CLAVIER TV - TASTATUR DES FERNSEHGERÄTS - COMANDI DEL TELEVISORE -

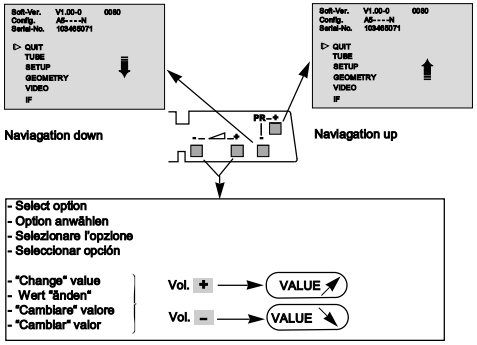

3 DISPLAYING THE VALUE OF THE SETTING - AFFICHAGE DES VALEURS - ANZEIGE DES EINSTELL WERTS VISUALIZZAZIONE DEL VALORE DELLA REGOLAZIONE - VISUALIZACION DEL VALOR DE AJUSTE

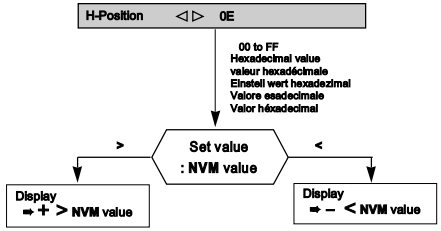

4 TOGGLE FUNCTIONS - VALIDATION DES FONCTIONS EIN-UND AUSSCHALT FUNKTIONEN - FUNZIONI DI COMMUTAZIONE - FUNCION CONMUTACION

To enable a function check (tick) ☑ the box.
Pour valider une fonction cocher ☑ la case correspondante
Zum Implementieren einer Funktion das Kontrollkästchen ☑ aktivieren (ankreuzen)
Per implementare una funzione di verifica, (vistare) ☑ la casella
Para poner en fucionamiento una función verifique (señale) ☑ la casilla

☑ : :Enable function ☐ : Disable function

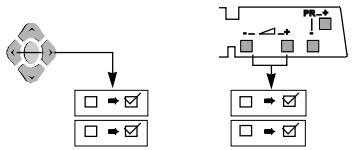

5 STORING VALUES IN MEMORY - MEMORISATION DES VALEURS - SPEICHERN DER WERTE - MEMORIZZAEZ I VALORI - VALORES ALMACENADOS EN LA MEMORIA

After setting, the values are stored in NVM.
Après réglages les valeurs sont mémorisées en NVM.
Nach dem Einstellen werden die Werte im NVM gespeichert.
Dopo la regolazione i valori vengono memorizzati in NVM.
Después del ajuste, los valores son almacenados en NVM

The box ☐ becomes ☑
During alignment, values are temporarily stored in RAM.
En cours d'alignement les valeurs sont mémorisées temporairement en RAM
Während des Abgleichs werden die Werte vorübergehend im RAM gespeichert
Durante l'allineamento i valori vengono memorizzati provvisoriamente sulla RAM
Durante el ajuste, los valores son almacenados temporalmente en RAM

Store ➠ Copies RAM values into NVM
Copie la valeur RAM en NVM
Kopieren des Werts von RAM nach NVM
Copiare i valori RAM in NVM
Copiar valores RAM en NVM

Restore ➠ Copies all values from NVM into RAM.
Copie toutes les valeurs des données NVM en RAM
Kopiert alle NVM-Datenwerte in den RAM
Copiare tutti i valori da NVM sulla RAM
Copia todos los valores de NVM a RAM

ROM Default ➠ All the default values of a page in use are stored in RAM.
L'ensemble des valeurs par défaut d'une page courante est chargé en RAM.
Sämtliche Standardwerte der aktuellen Seite werden im RAM geladen
Tutti i valori di default di una pagina in uso vengono memorizzati sulla RAM
Todos los valores por defecto de la página en curso están almacenados en RAM.

III - LITE-MENU FOR FIELD SERVICE MODE - MENUS DU MODE SERVICE

1 MAIN MENU - MENU PRINCIPAL

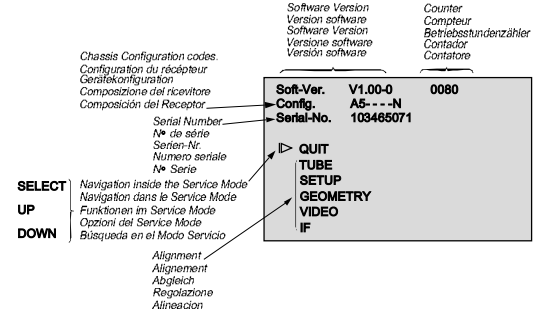

TV CONFIGURATION - CONFIGURATION DU TV - GERÄTEKONFIGURATION - CONFIGURAZIONE DEL TV - CONFIGURACIÓN DEL TV

Config.	A1Z-DKC

Character 1 : Tube type : «A»= 4/3 , «W» =16/9
Character 2 : Chassis type : «5» = 50Hz,
Character 3 : Zoom available : «Z»=yes, «-»=not
Character 4 : Ambiant Sensor : «S»= detected, «-»= not
Character 5 : Dolby : «D»=detected, «-»= not
Character 6 : AV Link detected : «K»=IR link detected, «-»= not
Character 7 : Chassis Variant: «N»= Nicam, «S»=Stereo

Serial-N0.	AI6——

Character 1 : Factory : «A»= Angers , «C» =Celle, «T» =Tarancon
Character 2 : Year : «G» = 1996, «H»= 1997 etc..
Character 3 : Month, from : «1»=January to «C»=December
Character 4-9 : Serial N0.

TIME COUNTER - COMPTEUR DE TEMPS - BETRIEBSSTUNDENZÄHLER - CONTATORE - CONTADOR

The counter indicates the TV's number of service hours.It counts from to 0 to 65535 hours. The display is hexadecimal.
Le compteur de temps indique le nombre d'heures de service du TV. Il compte de 0 à 65535 heures. L'affichage est en hexadécimal.
Der Zähler zeigt an, wieviele Stunden der Fernseher in Betrieb ist. Die Anzeige ist hexadezimal.
Il contatore indica il numero di ore di servizio del TV. Puo' contatore da 0 a 65535. La visualizzazione è esadecimale.
El contador indica el número de horas de servicio de la TV. Cuenta de 0 a 65535 horas. El visualizador es hexadecimal.

2 SUBMENU - SOUS-MENU

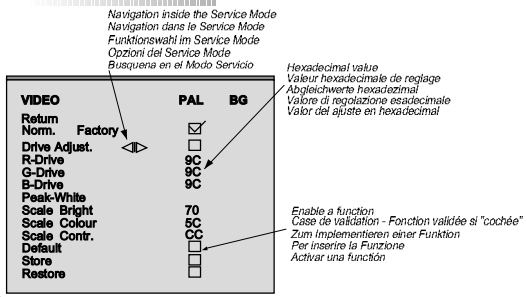

ALIGNMENT PROCEDURE - PROCESSUS DE REGLAGES - ABGLEICH - VISUALIZZAZIONE DEL VALORE DELLA REGOLAZIONE - PROCEDIMIENTO DE ALINEACION

TUBE
Return
Tube type A66ECY...
Store ◁ ▷ ☑
Restore ☐

SETUP
Return
Clear Progs. |▷
Kbd. Config. Default
WSS ☐
Default ☐
Store ☐
Restore ☐

GEOMETRY

Return	
V- Slope	7C
V-Amplitude	6C
V-Position ◁|▷	7C
Blanking On	☐
S - Correction	54
H-Position	94
H-Amplitude	70
EW-Amplitude	78
EW-Trapezium	98
Default	☐
Store	☐
Restore	☐

VIDEO PAL BG

Return	
Norm. Factory	☑
Drive Adjust. ◁|▷	☐
R-Drive	9C
G-Drive	9C
B-Drive	9C
Peak-White	
Scale Bright	70
Scale Colour	5C
Scale Contr.	CC
Default	☐
Store	☐
Restore	☐

IF
Return
AGC Take Over ◁|▷ 88
FFI - Bit ☐
Default ☑
Store ☑
Restore ☑

Test Pattern Signal used: 4/3 with geometric circle. Adjust separate for 4/3 and 16/9 format. See annexed

The signals colour standard is auto detected and displayed opposite the main menu line.

TUBE

Return
Closes the sub-menu and returns to the "Main Service Menu".Press </> on the RCU or VOL+/VOL- on TV front panel.
Retourne au menu principal.
Verlassen des Untermenüs,das Hauptmenü des service Modes erscheint
Chiude il sottomenu e fa apparire il menu principale Field Service Mode.
Cierra el submenú. El menú Field Service Mode aparece.
Press </>: remote control; Vol. +/- : TV keyb.

Tube type

After replacing the NVM, the correct tube type number must be entered (6 characters).
Once entered, the tubes geometry and video default vales are immediately activated.
Variable geometry and video parameters are written to the NVM when the "STORE" line is selected.
See table below for tube type numbers.

Definit le tube exact après changement de NVM.
Les nouvelles valeurs de tubes (avec video et géometrie) sont actives de suite.
Les paramètres de vidéo et de géométrie sont chargés en NVM lorsque STORE est sélectionné. Voir liste ci-dessous.

Nach Tausch des NVM den bildröhrentyp (6 Ziffern) auswählen. Die neuen Geometrie-und Video-defaultwerte werden sofort aktiv. Variable Geometrie- und Videowerte werden durch Speichern mit "STORE" ins NVM geschrieben. Bildrohrauflistung : siehe unten.

Scegliere il tubo appropriato dopo aver sostituito la NVM; i 6 caratteri che indicano il nuovo tipo di tubo, richiamano i valori video e geometria di default. I parametri per video e geometria vengono caricati nella NVM

Definir el tubo correcto después de haber cambiado el NVM.6 caracteres.Los nuevos valores de tipo de tubo (con la vídeo y la geometría por defecto) se activan inmediatamente. Los parámetros variables de geometría y vídeo se graban en el NVM al seleccionar la función Store. Vea más abajo la lista de tubos.

⟶ After setting ⟶ Store (+) ☑

Tube Name	LIST name	Description
A51EFS83X191	A51EFS	4:3; 21" OT; AK-Mask; Coty-M
A59EHJ43X15	A59EHJ	4:3; 25" MP; AK-Mask; Vector
A66EHJ43X15	A66EHJ	4:3; 28" MP; AK-Mask; Vector
A68EGD038X30	A68EGD	4:3; 29" SF; Invar; Vector
A80AEJ13X01	A80AEJ	4:3; 33" MP AK-Mask; Coty-M
A59EGD048X30	A59EGD	4:3; 25" SF; Invar-Mask; Vector
A68AGA25X01	A68AGA	4:3; 29" VHP; AK-Mask; Coty-M
W56EGV023X015	W56EGV	16:9; 24" SF; Invar-Mask; Vector
W66EGV023X015	W66EGV	16:9; 28" SF; Invar-Mask; Vector
W76EGV023X015	W76EGV	16:9; 32" SF; Invar-Mask; Vector

SETUP

Return
Closes the sub-menu and returns to the **"Main Service Menu"**.
Retourne au menu principal.
Verlassen des Untermenüs
Chiude il sottomenu e fa apparire il menu principale Field Service Mode.
Cierra el submenú. El menú Field Service Mode aparece.
Press </>: remote control; Vol. +/- : TV keyb.

Clear Prog.
Clears all programmes STORED in memory and RESETS all PICTURE and SOUND settings to the factory default values.
The AUTO INSTALL (out of factory) mode can be initialised by a long press (> 5sec.) of the selection button.

Efface tous les programmes mémorisés. valeurs SON et IMAGES: valeurs usines.
Pour sortir des valeurs usine :
Selection : Long press:2,5s

Löscht alle Programme und ersetzt alle Ton-und Bildeinstellungen durch Fabrikwerte. Nach erneutem Einschalten erscheint das Installationsmenü.
Anwahl: 2,5s drücken

Clear Prog.
Cancella tutti i programmi in memoria.I Valori analogici SUONO E IMMAGINE vengono riportati a livello di default. Per ristabilire le condizioni di uscita fabbrica, selezionare la funzione e premere per 2,5sec

Programa de borrado.
Borra todos los programas almacenados en la memoria.Valores análogos de SOUND PICTURE: valores de fábrica.Regreso a la TV para "salir del modo fábrica".Selección: Presión larga igual a 2,5 s.

☑ active-aktiv ☐ No active-inaktiv

Kbd. Config
Factory adjusted
Reserve au reglage usine
Reserviert für fabrikeinstellungen
Riservato alla regolazione di fabbrica

Kbd. Config ◁|▷ Default

WSS Automatic detection of DOLBY surround sound and 16/9 Format pictures via Teletext line number 23 is valid on all programmes.

Sélection du process WSS valid pour tous programmes

WSS (nur bei 16:9 oder Dolby)
Auswertung der Zeile 23 zur automatischen Format umschaltung und Dolby umschaltung

Identificazione "auto-surround" e "format" tramite il televideo, decodificando la riga 23. La selezione di WSS è valida per tutti i programmi.

Detección "auto-surround" y "format" a través de la línea 23 de Teletext.La selección del procesamiento WSS es válida para todos los programas.

☑ detect.enable- aktiv ☐ disable-inaktiv

GEOMETRY

Return
Closes the sub-menu and returns to the "Main Service Menu".
Retourne au menu principal.
Verlassen des Untermenüs
Chiude il sottomenu e fa apparire il menu principale Field Service Mode.
Cierra el submenú. El menú Field Service Mode aparece.
Press </>: remote control; Vol. +/- : TV keyb.

V-Blanking
Press </> on the RCU or VOL+/VOL- on TV front panel.
1.Select the standard 4:3 format and zoom mode 0.
1.Sélectionner le mode zoom standard 4/3 pour tube 4/3
1.Wählen Sie den Standard-Zoom 4:3 bei 4:3 Bildröhren.
1.Selezionare il modo zoom standard 4/3 per tubo 4/3
1.Seleccione el modo de zoom estándar 4/3 para tubo 4/3.
2.Apply a test pattern signal to the TV with a single horizontal and vertical line on the screen.
2.appliquer une MIRE de BARRE avec seulement une ligne blanche horizontale en milieu de l'ecran
2.Speisen Sie ein Testbild mit nur einem horizontalen Strich in der Bildmitte ein.
2.Applicare un monoscopio con un'unica linea bianca orizzontale al centro dello schermo
2.Aplique una plantilla de prueba con sólo una línea blanca horizontal en el centro de la pantalla.
3.Select **"Blanking On"** line of the menu and **ENABLE** (tick) the function, the bottom half of the screen will go black.
3.Positinner dans le mode Service Blanking On la moitié basse de l' ecran devient noire
3.Schalten Sie den Blanking-Mode ein. Die untere Hälfte des Bildschirms wird schwarz.
3.Posizionarsi in modo Service Blanking on; la parte inferiore dello schermo divienta nera
3.Pase al modo Service Blanking On. La mitad inferior de la pantalla se vuelve negra.
4.Select the **"V_Slope"** line of the menu and adjust its value until the centre line of the pattern is just invisible.
4.Aligner "Vertical - Slope" pour que la ligne mediane soit a peine non visible
4.Regeln Sie "V-Slope" so ein, daß die Mittellinie nahezu verschwindet.
4.Allineare la "Vertical Slope" in modo che la linea centrale sia appena visibile
4.Alinee "Vertical-Slope" para que la línea mediana sea casi invisible.
5.Return to the "Blanking On" line of the menu and DISABLE (un-tick) the function. ☐
5 Revenir à Blanking On et mettre ☐
5.Schalten Sie den Blanking-Mode wieder ein und ☐
5.Ritornare in modo Blanking on e porre ☐
5.Vuelva a "Blanking on" y poner ☐
6.Switch the test pattern signal to the crosshatch geometry pattern.
6.Positioner la mire de quadrillage
6.Speisen Sie ein Gittertestbild ein.
6.Posizionare il monoscopio
6.Coloque la plantilla cuadriculada.
7.Perform the geometry adjustments described below.
7.Effectuer les reglages de geometrie d'écrits ci- dessous
7.Nehmen Sie die Geometrieeinstellung wie unten beschrieben vor:
7.Effettuare le regolazioni di geometria descritte in precedenza
7.Efectúe los ajustes geométricos descritos más abajo.
8.Store /Memoriser /**Speichern** /Memorizzare /Almacene

GEOMETRY

9.Adjust position H.
9.Regler la position H
9.Korrigieren Sie Horizontale Lage.
9.Regolare la posizione H
9.Ajuste la posición H
10.Ajuster l'amplitude H
10.Adjust amplitude H.
10.Korrigieren Sie Horizontal-Amplitude
10 Regolare l'ampiezza H
10.Ajuste la amplitud H
11-12.Correction of EW pincushion distortion.
11-12.Correction de coussin EW
11-12.Korrektur der Ost/West Kissenverzerrung.
11-12.Correzione della distorsione a cuscino EW
11-12.Corrección de la distorsión de cojín EW.
13.Correction of corners (Shape).
13.Correction de coins (Shape)
13.Korrektur der Ecken.
13.Correzione degli angoli (Forma)
13.Corrección de esquinas (Shape)
14.Trapeze. / Trapèze
14 Trapez-Verzerrung.
14.Trapezio / Trapecio
"These adjustments are not necessary for 4:3 tubes in 16:9 mode"
"Pour les tubes 4/3 en mode 16/9, ces reglages ne sont pas necessaire"
"Diese Einstellungen sind nicht für 4:3 Bildröhren im 16:9 Betrieb erforderlich."
"Queste regolazioni non sono necessarie per tubi 4/3 in modo 16/9"
"Estos ajustes no son necesarios para los tubos 4/3 en modo 16/9"

V-Amplitude V-Position	
H-Position	
S -Correction	S
H-Amplitude	
EW - Amplitude	
EW - Trapezium	
EW -Shape	

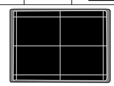

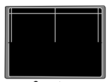
Correct

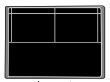
incorrect

⟶ After setting ⟶ Store (+) ☑

VIDEO PAL

Return
Closes the sub-menu and returns to the **"Main Service Menu"**.
Press </> on the RCU or VOL+/VOL- on TV front panel.
Retourne au menu principal.
Verlassen des Untermenüs
Chiude il sottomenu e fa apparire il menu principale Field Service Mode.
Cierra el submenú. El menú Field Service Mode aparece.
Press </>: remote control; Vol. +/- : TV keyb.

Normalise User Settings
Recalls the factory settings for colour, brightness, contrast and sharpness and sets contrast expand to "low".
☑ Factory settings recalled
☐ User settings kept.

R-Cut off* / **G-Cut off***: ☼+ ◐+ ◑=nom. Grey scale test pattern white =100% (grey)

R - Drive / **G - Drive** / **B - Drive**: ☼+ ◐+ ◑=nom. Grey scale test pattern white =100% (white)

Peak-White**: ☼+ ◑+ ◐=nom. Peek white test pattern white =100%

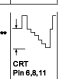
CRT Pin 6,8,11

Blue cathode Blue cathode

Tube Type	[init]	
A51EFS	420	(600max)
A59EHJ	380	(540max)
A59EGD	400	(470max)
A66EHJ	300	(430max)
A68EGD	350	(410max)

Tube Type	[init]	
A80AEJ	240	(340max)
W56EGV	520	(610max)
W66EGV	480	(560max)
W76EGV	300	(350max)

Scal. Brightness: ☼+ ◐ = 50%; ◑ = 100%; Grey scale test pattern white =100% (black)

Scal*. Colour: ☼+ ◐+ ◑=nom. PAL (then SECAM +RGB) 75% Colour bar test pattern via RF.

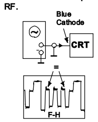

Scal. Contrast: factory settings.

IF

AGC
- Minimum noise- Minimum de bruit
- Minimum Rauschen- Rumore minimo
- Minimo ruido

FFI - Bit
Fast filter (IF /PLL)
Filtre rapide (FI /PLL)
Schnelles filter (ZF/PLL)
Filtro rapido (IF /PLL)

☑ Asie
☐ Europ

⟶ After setting ⟶ Store (+) ☑

Note :
* adjust separate for PAL/NTSC/SECAM and RGB/AV getrennte Einstellung für PAL/SEACAM und RGB/AV
* * After PEAK white adjustment control cut off setting. Repeat the adjustments if necessary.
Nach der Einstellung von "Peak white" die "Cut off"- Einstellungen wiederholen.

GEOMETRY MODE ALIGNMENT

4/3 picture tube

Signal : 4/3 test pattern

4 / 3 standard mode zoom 0	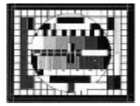	overscan V=107% , H=107% 1- Adjust Vertical position and Vertical amplitude 2- Adjust Vertical Blanking and linearity 3- Adjust Horizontal position and Horizontal ampltude 4-Adjust EW Amplitude ,EW Shape and Trapezium
<4/3> zoom 1	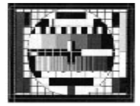	overscan V=120% , H=120%
16 / 9 standard mode zoom 0	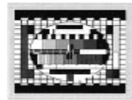	Adjust the vertical height until V = 80%
<16 / 9> zoom 1	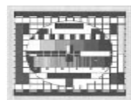	Adjust the vertical height : V =90%

16/9 picture tube

Signal : 4/3 test pattern

16 / 9 standard mode zoom 0	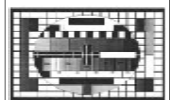	overscan V=107%, H =107% 1- Adjust Vertical position and Vertical amplitude 2- Adjust Vertical Blanking and linearity 3- Adjust Horizontal position and Horizontal ampltude 4-Adjust EW Amplitude ,EW Shape and Trapezium

LOCATION OF CONTROLS - EMPLACEMENT DES REGLAGES - SERVICE LAGEPLAN - POSIZIONE REGOLATORI DI SERVIZIO - SITUACIÓN DE LOS AJUSTES

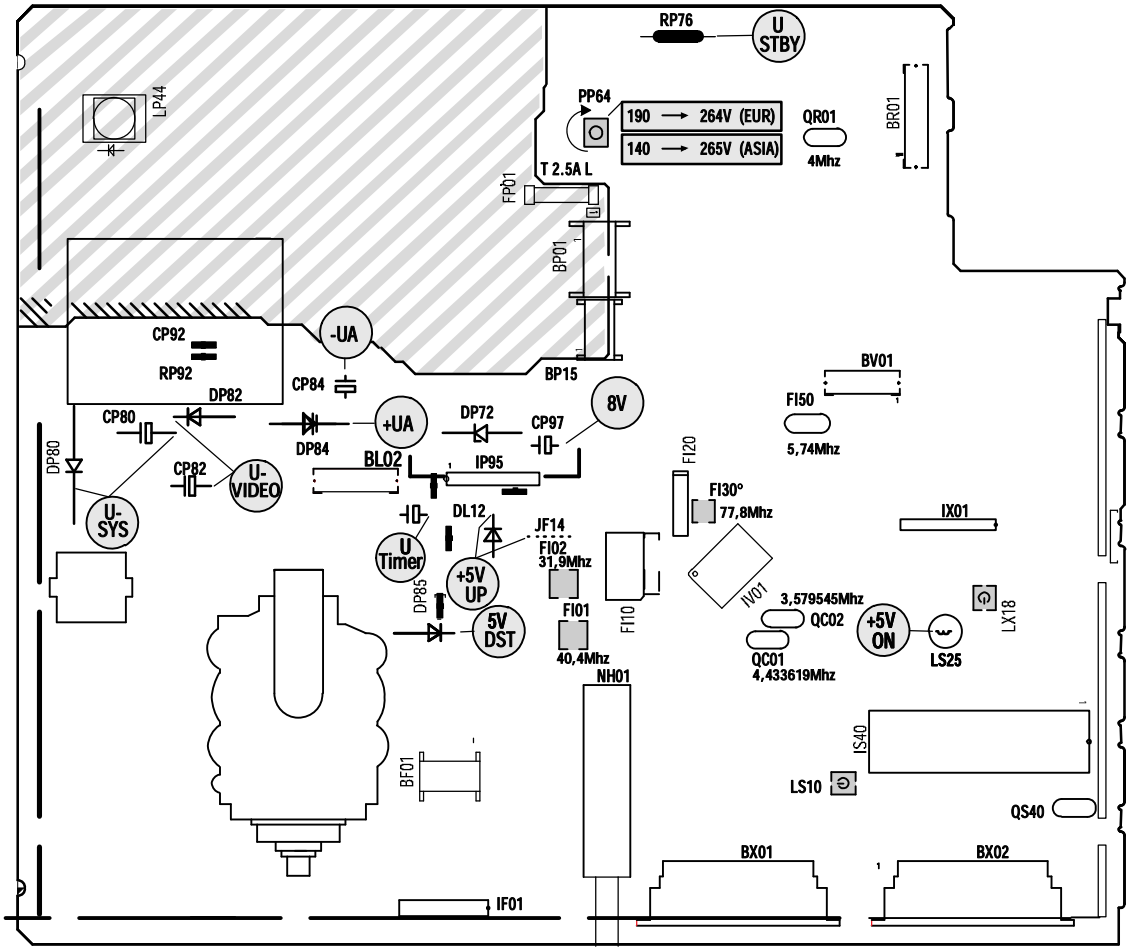

° it is not necessary , to adjust FI30 by after sales

Part of board connected to mains supply.
Partie du châssis reliée au secteur.
Primärseite des Netzteils.
Parte dello châssis collegata alla rete.
Parte del chassis conectada a la red.

⚠ Use isolating mains transformer -
Utiliser un transformateur isolateur du secteur -
Trenntrafo verwenden -
Utilizar un transformador aislador de red -
Utilizzare un trasformatore per isolarvi dalla rete

ADJUSTMENTS - REGLAGES - EINSTELLUNGEN - REGOLAZIONI - AJUSTES

<table>
<tr>
<td>U Sys</td>
<td>PP 64</td>
<td>+ + = 50%</td>
<td> 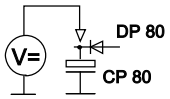
</td>
<td>
<table>
<tr><th>Tube</th><th>Format</th><th>Usys</th><th>Jumper</th><th>RL65</th></tr>
<tr><td>A51EFS83X191</td><td>4:3</td><td>126V+/-0,5V</td><td>JL80</td><td>4k7</td></tr>
<tr><td>A59EHJ43X15</td><td>4:3</td><td>132V+/-0,5V</td><td>JL81</td><td>24k</td></tr>
<tr><td>A66EHJ43X15</td><td>4:3</td><td>132V+/-0,5V</td><td>JL81</td><td>24k</td></tr>
<tr><td>A59EGD048X30</td><td>4:3</td><td>126V+/-0,5V</td><td>JL80</td><td>4k7</td></tr>
<tr><td>A68EGD038X30</td><td>4:3</td><td>126V+/-0,5V</td><td>JL80</td><td>4k7</td></tr>
<tr><td>A68AGA25X01</td><td>4:3</td><td>126V+/-0,5V</td><td>JL80</td><td>4k7</td></tr>
<tr><td>A80AEJ15X01</td><td>4:3</td><td>126V+/-0,5V</td><td>JL80</td><td>4k7</td></tr>
<tr><td>W56EGV023X015</td><td>16:9</td><td>138V+/-0,5V</td><td>JL82</td><td>47k</td></tr>
<tr><td>W66EGV023X015</td><td>16:9</td><td>138V+/-0,5V</td><td>JL82</td><td>47k</td></tr>
<tr><td>W76EGV023X015</td><td>16:9</td><td>138V+/-0,5V</td><td>JL82</td><td>47k</td></tr>
</table>
</td>
</tr>
<tr>
<td rowspan="2">IF Alignment
Alignement FI</td>
<td>trap 40,4Mhz
FI 01</td>
<td rowspan="2">Switch set to standard BG
Commuter le TV au standard BG

IF Signal
40,4MHz (BG)
31,9MHz (BG)
TUNER
50 mV
1nF
11
75Ω
NH01</td>
<td> 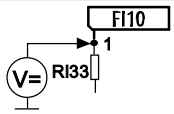
</td>
<td>Adjust FI01 for minimum value at 40,4Mhz</td>
</tr>
<tr>
<td>trap 31,9Mhz
FI 02</td>
<td> 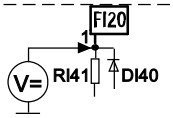
</td>
<td>Adjust FI20 for minimum value at 31,9Mhz</td>
</tr>
<tr>
<td>U G2 / cutoff</td>
<td>SCREEN</td>
<td>+ + = 50%

AV (no Signal, black screen)</td>
<td> 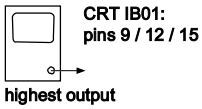
</td>
<td> 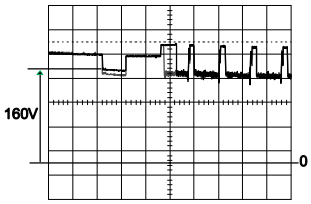
</td>
</tr>
<tr>
<td>FOCUS</td>
<td>FOCUS
LL05</td>
<td>Test pattern
(standard values)</td>
<td> </td>
<td>Sharp picture</td>
</tr>
</table>

SERVICE MODE (GB)

MODE SERVICE (F)

I - ENTER/EXIT SERVICE MODE - ENTREE/SORTIE DU MODE SERVICE

1 ACCESSING THE SERVICE MODE

TV Control Panel Access

- Switch the TV into **"Standby"** mode by pressing the Standby button on the RCU.
- Switch **"OFF"** the mains supply to the TV and wait for the LED to extinguish.
- Whilst holding depressed the **PR -** and **VOL-** (8s), switch **"ON"** the mains supply to the TV.
- Once initialised, the **Main Service Menu** will appear on the screen of the TV.

```
Soft-Ver.   V1.00-0     0080
Config.     A5- - - -N
Serial-No.  103465071

 QUIT
 TUBE
 SETUP
 GEOMETRY
 VIDEO
 IF
```

Please Note:

In the service mode :
- *The CHILD LOCK function is re-initialised.The LOCK function (PIN number) is ignored.*
- *All Wake-up/Sleep timer settings are CLEARED.*
- *SCART socket pin 8 switching voltages are ignored.*
- *AV-Link, WSS Detection, EPG and TELETEXT functions are disabled.*
- *Automatic standby mode switching functions (no signal conditions) are disabled.*
- *Brightness, Colour and Contrast are set to factory defaults.*
- *Sharpness settings are set to MID position.*
- *Contrast Expand is set to LOW.*
- *Automatic INSTALL mode is disabled.*
- *FORMAT and ZOOM are reset to factory defaults.*

1 ACCES AU MODE SERVICE

Accès avec le clavier du téléviseur

- Commuter le téléviseur en position de veille avec la télécommande. Eteindre le téléviseur par l'interrupteur secteur (attendre l'extinction complète du voyant).
- Tout en appuyant sur les touches **PR -** et **VOL -** , mettre le TV en service à l'aide de la touche **M/A**.
- Maintenir enfoncées les touches **PR -** et **VOL -**. (8s) Le menu suivant apparaît.

```
Soft-Ver.   V1.00-0     0080
Config.     A5- - - -N
Serial-No.  103465071

 QUIT
 TUBE
 SETUP
 GEOMETRY
 VIDEO
 IF
```

Note :

En mode service:
- *Le verrouillage parental est effacé (réinitialisé).*
- *La fonction de verrouillage (Pin number) est ignorée.*
- *La programmation des heures «reveille/matin» est annulée.*
- *Possibilité de passer en mode service avec commutation lente active.*
- *AV- Link , la détection WSS, l'EPG et le Vidéotexte ne sont pas validés.*
- *La fonction de stand-by automatique en cas d'absence de signal d'antenne n'est pas validée.*
- *Les valeurs de réglages usine sont affectées au contraste, à la couleur et à la lumière.*
- *Le contour est appelé à sa valeur moyenne.*
- *L'expansion contraste est au niveau bas.*
- *Le mode ambiance «Light sensor» n'est pas valides.*
- *Zoom et format ignorées.*

2 TEMPORARY EXIT FROM SERVICE MODE

- Press the **"EXIT"** button on the RCU.
- Pressing the **"MENU"** button on the RCU will activate the customer menus.

- The Service Menu can be re-entered by pressing the "BLUE" button on the RCU.

2 SORTIE TEMPORAIRE DU MODE SERVICE

- Utiliser la touche Exit de la télécommande.
- Le menu utilisateur peut être accessible via la touche «Menu».

- Pour entrer à nouveau dans le mode service utiliser la touche bleue.

3 EXITING FROM SERVICE MODE

Remote Control

- Select the **"QUIT"** line of the **"Main Service Menu"**.
- Press «<», «OK» or «>» button

TV Control Panel

- Press «VOL.+»button

ON/OFF key or "Stand-by" buttons

- RCU **"Standby"** button or switch **"OFF"** mains supply.

- TV mode.

*Values or adjustment not "**STORED**" before exiting the service mode will **NOT** be "**SAVED**" in the NVM.*

3 SORTIE DEFINITIVE DU MODE SERVICE

télécommande

- Aller au point «QUIT» dans le menu principal du mode service.
- Appuyer sur «<», «OK» ou «>»

clavier du téléviseur

-Appuyer sur «VOL+»

Inter M/A ou Stand-by

- Foncion Stand-by ou «off» par M/A

- Mode TV.

Les valeurs ou réglages non mémorisées avant la sortie ne seront pas écrites en NVM.

II - NAVIGATION INSIDE THE SERVICE MODE - DEPLACEMENT DANS LE MODE SERVICE FUNCTIONS WALLIN SERVICE MODE - OPZIONI NEL SERVICE MODE - BUSQUEDA EN MODO SERVICIO

1 REMOTE CONTROL - TELECOMMANDE - FERNBEDIENUNG TELECOMANDO - MANDO A DISTANCIA

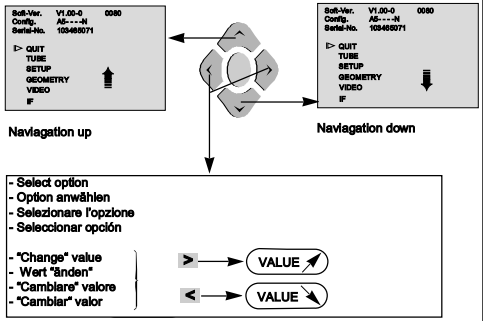

2 TV CONTROL PANEL - CLAVIER TV - TASTATUR DES FERNSEHGERÄTS - COMANDI DEL TELEVISORE -

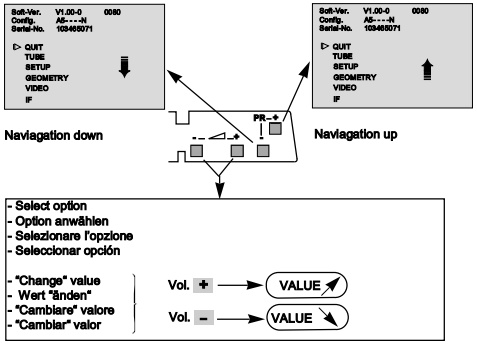

3 DISPLAYING THE VALUE OF THE SETTING - AFFICHAGE DES VALEURS - ANZEIGE DES EINSTELL WERTS VISUALIZZAZIONE DEL VALORE DELLA REGOLAZIONE - VISUALIZACION DEL VALOR DE AJUSTE

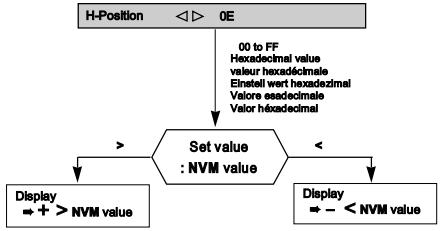

4 TOGGLE FUNCTIONS - VALIDATION DES FONCTIONS EIN-UND AUSSCHALT FUNKTIONEN - FUNZIONI DI COMMUTAZIONE - FUNCION CONMUTACION

To enable a function check (tick) ☑ the box.
Pour valider une fonction cocher ☑ la case correspondante
Zum Implementieren einer Funktion das Kontrollkästchen ☑ aktivieren (ankreuzen)
Per implementare una funzione di verifica, (vistare) ☑ la casella
Para poner en fucionamiento una función verifique (señale) ☑ la casilla

☑ : :Enable function ☐ : Disable function

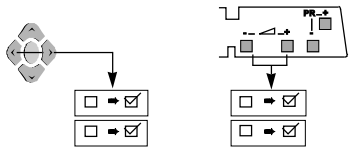

5 STORING VALUES IN MEMORY - MEMORISATION DES VALEURS - SPEICHERN DER WERTE - MEMORIZZAEZ I VALORI - VALORES ALMACENADOS EN LA MEMORIA

After setting, the values are stored in NVM.
Après réglages les valeurs sont mémorisées en NVM.
Nach dem Einstellen werden die Werte im NVM gespeichert.
Dopo la regolazione i valori vengono memorizzati in NVM.
Después del ajuste, los valores son almacenados en NVM

The box ☐ becomes ☑
During alignment, values are temporarily stored in RAM.
En cours d'alignement les valeurs sont mémorisées temporairement en RAM
Während des Abgleichs werden die Werte vorübergehend im RAM gespeichert
Durante l'allineamento i valori vengono memorizzati provvisoriamente sulla RAM
Durante el ajuste, los valores son almacenados temporalmente en RAM

Store ➠ Copies RAM values into NVM
Copie la valeur RAM en NVM
Kopieren des Werts von RAM nach NVM
Copiare i valori RAM in NVM
Copiar valores RAM en NVM

Restore ➠ Copies all values from NVM into RAM.
Copie toutes les valeurs des données NVM en RAM
Kopiert alle NVM-Datenwerte in den RAM
Copiare tutti i valori da NVM sulla RAM
Copia todos los valores de NVM a RAM

ROM Default ➠ All the default values of a page in use are stored in RAM.
L'ensemble des valeurs par défaut d'une page courante est chargé en RAM.
Sämtliche Standardwerte der aktuellen Seite werden im RAM geladen
Tutti i valori di default di una pagina in uso vengono memorizzati sulla RAM
Todos los valores por defecto de la página en curso están almacenados en RAM.

III - LITE-MENU FOR FIELD SERVICE MODE - MENUS DU MODE SERVICE

1 MAIN MENU - MENU PRINCIPAL

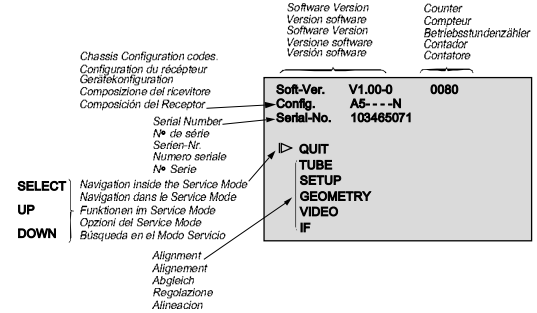

TV CONFIGURATION - CONFIGURATION DU TV - GERÄTEKONFIGURATION - CONFIGURAZIONE DEL TV - CONFIGURACIÓN DEL TV

Config.	A1Z-DKC

Character 1 : Tube type : «A»= 4/3 , «W» =16/9
Character 2 : Chassis type : «5» = 50Hz,
Character 3 : Zoom available : «Z»=yes, «-»=not
Character 4 : Ambiant Sensor : «S»= detected, «-»= not
Character 5 : Dolby : «D»=detected, «-»= not
Character 6 : AV Link detected : «K»=IR link detected, «-»= not
Character 7 : Chassis Variant: «N»= Nicam, «S»=Stereo

Serial-N0.	AI6——

Character 1 : Factory : «A»= Angers , «C» =Celle, «T» =Tarancon
Character 2 : Year : «G» = 1996, «H»= 1997 etc..
Character 3 : Month, from : «1»=January to «C»=December
Character 4-9 : Serial N0.

TIME COUNTER - COMPTEUR DE TEMPS - BETRIEBSSTUNDENZÄHLER - CONTATORE - CONTADOR

The counter indicates the TV's number of service hours.It counts from to 0 to 65535 hours. The display is hexadecimal.
Le compteur de temps indique le nombre d'heures de service du TV. Il compte de 0 à 65535 heures. L'affichage est en hexadécimal.
Der Zähler zeigt an, wieviele Stunden der Fernseher in Betrieb ist. Die Anzeige ist hexadezimal.
Il contatore indica il numero di ore di servizio del TV. Puo' contatore da 0 a 65535. La visualizzazione è esadecimale.
El contador indica el número de horas de servicio de la TV. Cuenta de 0 a 65535 horas. El visualizador es hexadecimal.

2 SUBMENU - SOUS-MENU

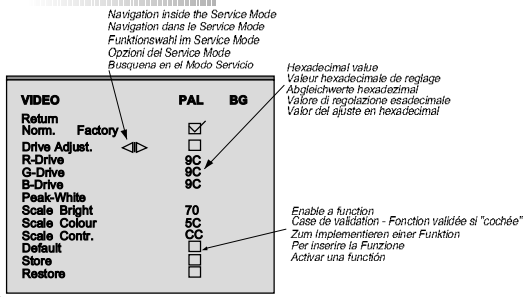

ALIGNMENT PROCEDURE - PROCESSUS DE REGLAGES - ABGLEICH - VISUALIZZAZIONE DEL VALORE DELLA REGOLAZIONE - PROCEDIMIENTO DE ALINEACION

TUBE	
Return	
Tube type	A66ECY...
Store	◁ ▷ ☑
Restore	☐

SETUP		
Return		
Clear	Progs.	▷
Kbd.	Config.	Default
WSS		☐
Default		☐
Store		☐
Restore		☐

GEOMETRY		
Return		
V- Slope		7C
V-Amplitude		6C
V-Position	◁▷	7C
Blanking On		☐
S - Correction		54
H-Position		94
H-Amplitude		70
EW-Amplitude		78
EW-Trapezium		98
Default		☐
Store		☐
Restore		☐

VIDEO		PAL BG
Return		
Norm.	Factory	☑
Drive Adjust.	◁▷	☐
R-Drive		9C
G-Drive		9C
B-Drive		9C
Peak-White		
Scale Bright		70
Scale Colour		5C
Scale Contr.		CC
Default		☐
Store		☐
Restore		☐

IF		
Return		
AGC Take Over	◁▷	88
FFI - Bit		☐
Default		☑
Store		☑
Restore		☑

Test Pattern Signal used: 4/3 with geometric circle. Adjust separate for 4/3 and 16/9 format. See annexed

The signals colour standard is auto detected and displayed opposite the main menu line.

TUBE

Return

Closes the sub-menu and returns to the "Main Service Menu".Press </> on the RCU or VOL+/VOL- on TV front panel.

Retourne au menu principal.

Verlassen des Untermenüs,das Hauptmenü des service Modes erscheint

Chiude il sottomenu e fa apparire il menu principale Field Service Mode.

Cierra el submenú. El menú Field Service Mode aparece.

Press </>: remote control; Vol. +/- : TV keyb.

Tube type

After replacing the NVM, the correct tube type number must be entered (6 characters).
Once entered, the tubes geometry and video default vales are immediately activated.
Variable geometry and video parameters are written to the NVM when the "STORE" line is selected.
See table below for tube type numbers.

Definit le tube exact après changement de NVM.
Les nouvelles valeurs de tubes (avec video et géometrie) sont actives de suite.
Les paramètres de vidéo et de géométrie sont chargés en NVM lorsque STORE est sélectionné. Voir liste ci-dessous.

Nach Tausch des NVM den bildröhrentyp (6 Ziffern) auswählen. Die neuen Geometrie-und Video-defaultwerte werden sofort aktiv. Variable Geometrie- und Videowerte werden durch Speichern mit "STORE" ins NVM geschrieben. Bildrohrauflistung : siehe unten.

Scegliere il tubo appropriato dopo aver sostituito la NVM; i 6 caratteri che indicano il nuovo tipo di tubo, richiamano i valori video e geometria di default. I parametri per video e geometria vengono caricati nella NVM

Definir el tubo correcto después de haber cambiado el NVM.6 caracteres.Los nuevos valores de tipo de tubo (con la vídeo y la geometría por defecto) se activan inmediatamente. Los parámetros variables de geometría y vídeo se graban en el NVM al seleccionar la función Store. Vea más abajo la lista de tubos.

⟶ After setting ⟶ Store (+) ☑

Tube Name	LIST name	Description
A51EFS83X191	A51EFS	4:3; 21" OT; AK-Mask; Coty-M
A59EHJ43X15	A59EHJ	4:3; 25" MP; AK-Mask; Vector
A66EHJ43X15	A66EHJ	4:3; 28" MP; AK-Mask; Vector
A68EGD038X30	A68EGD	4:3; 29" SF; Invar; Vector
A80AEJ13X01	A80AEJ	4:3; 33" MP AK-Mask; Coty-M
A59EGD048X30	A59EGD	4:3; 25" SF; Invar-Mask; Vector
A68AGA25X01	A68AGA	4:3; 29" VHP; AK-Mask; Coty-M
W56EGV023X015	W56EGV	16:9; 24" SF; Invar-Mask; Vector
W66EGV023X015	W66EGV	16:9; 28" SF; Invar-Mask; Vector
W76EGV023X015	W76EGV	16:9; 32" SF; Invar-Mask; Vector

SETUP

Return

Closes the sub-menu and returns to the **"Main Service Menu".**

Retourne au menu principal.

Verlassen des Untermenüs

Chiude il sottomenu e fa apparire il menu principale Field Service Mode.

Cierra el submenú. El menú Field Service Mode aparece.

Press </>: remote control; Vol. +/- : TV keyb.

Clear Prog.

Clears all programmes STORED in memory and RESETS all PICTURE and SOUND settings to the factory default values.
The AUTO INSTALL (out of factory) mode can be initialised by a long press (> 5sec.) of the selection button.

Efface tous les programmes mémorisés. valeurs SON et IMAGES: valeurs usines.
Pour sortir des valeurs usine :
Selection : Long press:2,5s

Löscht alle Programme und ersetzt alle Ton-und Bildeinstellungen durch Fabrikwerte. Nach erneutem Einschalten erscheint das Installationsmenü. Anwahl: 2,5s drücken

Clear Prog.
Cancella tutti i programmi in memoria.I Valori analogici SUONO E IMMAGINE vengono riportati a livello di default. Per ristabilire le condizioni di uscita fabbrica, selezionare la funzione e premere per 2,5sec

Programa de borrado.
Borra todos los programas almacenados en la memoria.Valores análogos de SOUND PICTURE: valores de fábrica.Regreso a la TV para "salir del modo fábrica".Selección: Presión larga igual a 2,5 s.

☑ active-aktiv ☐ No active-inaktiv

Kbd. Config

Factory adjusted
Reserve au reglage usine
Reserviert für fabrikeinstellungen
Riservato alla regolazione di fabbrica

Kbd. Config ◁▷ Default

WSS Automatic detection of DOLBY surround sound and 16/9 Format pictures via Teletext line number 23 is valid on all programmes.

Sélection du process WSS valid pour tous programmes

WSS (nur bei 16:9 oder Dolby)
Auswertung der Zeile 23 zur automatischen Format umschaltung und Dolby umschaltung

Identificazione "auto-surround" e "format" tramite il televideo, decodificando la riga 23. La selezione di WSS è valida per tutti i programmi.

Detección "auto-surround" y "format" a través de la línea 23 de Teletext.La selección del procesamiento WSS es válida para todos los programas.

☑ detect.enable- aktiv ☐ disable-inaktiv

GEOMETRY

Return

Closes the sub-menu and returns to the "Main Service Menu".

Retourne au menu principal.

Verlassen des Untermenüs

Chiude il sottomenu e fa apparire il menu principale Field Service Mode.

Cierra el submenú. El menú Field Service Mode aparece.

Press </>: remote control; Vol. +/- : TV keyb.

V-Blanking
Press </> on the RCU or VOL+/VOL- on TV front panel.

1.Select the standard 4:3 format and zoom mode 0.
1.Sélectionner le mode zoom standard 4/3 pour tube 4/3
1.Wählen Sie den Standard-Zoom 4:3 bei 4:3 Bildröhren.
1.Selezionare il modo zoom standard 4/3 per tubo 4/3
1.Seleccione el modo de zoom estándar 4/3 para tubo 4/3.
2.Apply a test pattern signal to the TV with a single horizontal and vertical line on the screen.
2.appliquer une MIRE de BARRE avec seulement une ligne blanche horizontale en milieu de l'ecran
2.Speisen Sie ein Testbild mit nur einem horizontalen Strich in der Bildmitte ein.
2.Applicare un monoscopio con un'unica linea bianca orizzontale al centro dello schermo
2.Aplique una plantilla de prueba con sólo una línea blanca horizontal en el centro de la pantalla.
3.Select **"Blanking On"** line of the menu and **ENABLE** (tick) the function, the bottom half of the screen will go black.
3.Positinner dans le mode Service Blanking On la moitié basse de l' ecran devient noire
3.Schalten Sie den Blanking-Mode ein. Die untere Hälfte des Bildschirms wird schwarz.
3.Posizionarsi in modo Service Blanking on; la parte inferiore dello schermo diventa nera
3.Pase al modo Service Blanking On. La mitad inferior de la pantalla se vuelve negra.
4.Select the **"V_Slope"** line of the menu and adjust its value until the centre line of the pattern is just invisible.
4.Aligner "Vertical - Slope" pour que la ligne mediane soit a peine non visible
4.Regeln Sie "V-Slope" so ein, daß die Mittellinie nahezu verschwindet.
4.Allineare la "Vertical Slope" in modo che la linea centrale sia appena visibile
4.Alinee "Vertical-Slope" para que la línea mediana sea casi invisible.
5.Return to the "Blanking On" line of the menu and DISABLE (un-tick) the function. ☐
5 Revenir à Blanking On et mettre ☐
5.Schalten Sie den Blanking-Mode wieder ein und ☐
5.Ritornare in modo Blanking on e porre ☐
5.Vuelva a "Blanking on" y poner ☐
6.Switch the test pattern signal to the crosshatch geometry pattern.
6.Positioner la mire de quadrillage
6.Speisen Sie ein Gittertestbild ein.
6.Posizionare il monoscopio
6.Coloque la plantilla cuadriculada.
7.Perform the geometry adjustments described below.
7.Effectuer les reglages de geometrie d'écrits ci- dessous
7.Nehmen Sie die Geometrieeinstellung wie unten beschrieben vor:
7.Effettuare le regolazioni di geometria descritte in precedenza
7.Efectúe los ajustes geométricos descritos más abajo.
8.Store /Memoriser **/Speichern** /Memorizzare /Almacene

9.Adjust position H.
9.Regler la position H
9.Korrigieren Sie Horizontale Lage.
9.Regolare la posizione H
9.Ajuste la posición H
10.Ajuster l'amplitude H
10.Adjust amplitude H.
10.Korrigieren Sie Horizontal-Amplitude
10 Regolare l'ampiezza H
10.Ajuste la amplitud H
11-12.Correction of EW pincushion distortion.
11-12.Correction de coussin EW
11-12.Korrektur der Ost/West Kissenverzerrung.
11-12.Correzione della distorsione a cuscino EW
11-12.Corrección de la distorsión de cojín EW.
13.Correction of corners (Shape).
13.Correction de coins (Shape)
13.Korrektur der Ecken.
13.Correzione degli angoli (Forma)
13.Corrección de esquinas (Shape)
14.Trapeze. / Trapèze
14 Trapez-Verzerrung.
14.Trapezio / Trapecio

"These adjustments are not necessary for 4:3 tubes in 16:9 mode"
"Pour les tubes 4/3 en mode 16/9, ces reglages ne sont pas necessaire"
"Diese Einstellungen sind nicht für 4:3 Bildröhren im 16:9 Betrieb erforderlich."
"Queste regolazioni non sono necessarie per tubi 4/3 in modo 16/9"
"Estos ajustes no son necesarios para los tubos 4/3 en modo 16/9"

V-Amplitude V-Position	
H-Position	
S -Correction	S
H-Amplitude	
EW - Amplitude	
EW - Trapezium	
EW -Shape	

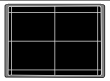

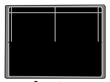
Correct

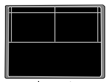
incorrect

⟶ After setting ⟶ Store (+) ☑

VIDEO PAL

Return
Closes the sub-menu and returns to the **"Main Service Menu".**
Press </> on the RCU or VOL+/VOL- on TV front panel.

Retourne au menu principal.

Verlassen des Untermenüs

Chiude il sottomenu e fa apparire il menu principale Field Service Mode.

Cierra el submenú. El menú Field Service Mode aparece.

Press </>: remote control; Vol. +/- : TV keyb.

Normalise User Settings

Recalls the factory settings for colour, brightness, contrast and sharpness and sets contrast expand to "low".

☑ Factory settings recalled
☐ User settings kept.

R-Cut off* / G-Cut off*	☼+ ◑+ ◐=nom. Grey scale test pattern white =100% (grey)
R - Drive / G - Drive / B - Drive	☼+ ◑+ ◐=nom. Grey scale test pattern white =100% (white)
Peak-White**	☼+ ◐+ ◑=nom. Peek white test pattern white =100%
Scal. Brightness	☼+ ◑ = 50%; ◐ = 100%; Grey scale test pattern white =100% (black)
Scal*. Colour	☼+ ◑+ ◐=nom. PAL (then SECAM +RGB) 75% Colour bar test pattern via RF.
Scal. Contrast	factory settings.

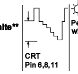

Blue cathode

Tube Type	[init]	
A51EFS	420	(600max)
A59EHJ	380	(540max)
A59EGD	400	(470max)
A66EHJ	300	(430max)
A68EGD	350	(410max)

Blue cathode

Tube Type	[init]	
A80AEJ	240	(340max)
W56EGV	520	(610max)
W66EGV	480	(560max)
W76EGV	300	(350max)

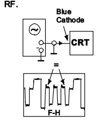

IF

AGC
- Minimum noise- Minimum de bruit
- Minimum Rauschen- Rumore minimo
- Mínimo ruido

FFI - Bit

Fast filter (IF /PLL)
Filtre rapide (FI /PLL)
Schnelles filter (ZF/PLL)
Filtro rapido (IF /PLL)

☑ Asie
☐ Europ

⟶ After setting ⟶ Store (+) ☑

Note :
* adjust separate for PAL/NTSC/SECAM and RGB/AV
getrennte Einstellung für PAL/SEACAM und RGB/AV
** After PEAK white adjustment control cut off setting. Repeat the adjustments if necessary.
Nach der Einstellung von "Peak white" die "Cut off"- Einstellungen wiederholen.

GEOMETRY MODE ALIGNMENT

4/3 picture tube

Signal : 4/3 test pattern

4 / 3 standard mode zoom 0	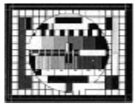	overscan V=107% , H=107% 1- Adjust Vertical position and Vertical amplitude 2- Adjust Vertical Blanking and linearity 3- Adjust Horizontal position and Horizontal ampltude 4-Adjust EW Amplitude ,EW Shape and Trapezium
<4/3> zoom 1	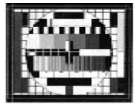	overscan V=120% , H=120%
16 / 9 standard mode zoom 0		Adjust the vertical height until V = 80%
<16 / 9> zoom 1	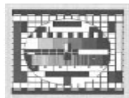	Adjust the vertical height : V =90%

16/9 picture tube

Signal : 4/3 test pattern

16 / 9 standard mode zoom 0	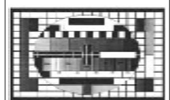	overscan V=107%, H =107% 1- Adjust Vertical position and Vertical amplitude 2- Adjust Vertical Blanking and linearity 3- Adjust Horizontal position and Horizontal ampltude 4-Adjust EW Amplitude ,EW Shape and Trapezium

VIDEO AMPLIFIER BOARD - PLATINE AMPLIFICATEURS VIDEO - VIDEOVERSTÄRKERPLATTE - PIASTRA AMPLIFICATORE VIDEO - PLATINA AMPLIFICADOR VIDEO

COMPONENT SIDE - CÔTE COMPOSANTS - BESTÜCKUNGSSEITE - LATO COMPONENTI - LADO COMPONENTES

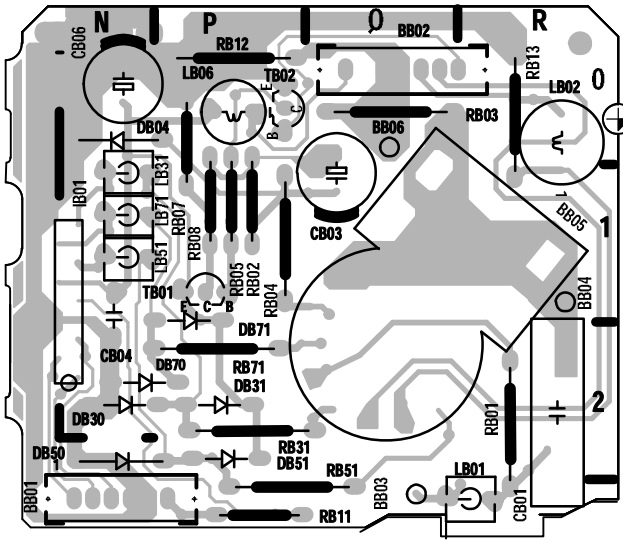

SOLDER SIDE - CÔTE SOUDURES - LÖTSEITE - LATO SALDATURE - LADO SOLDADURAS

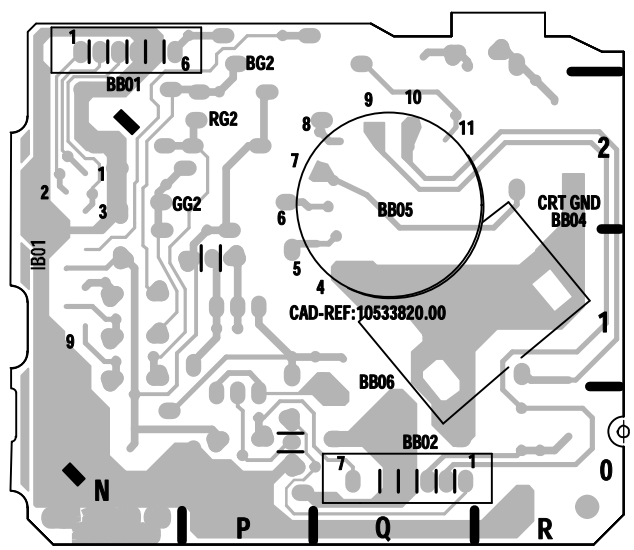

POWER SUPPLY - ALIMENTATION - NETZTEIL - ALIMENTAZIONE - ALIMENTACIÓN

(5) : standby

Note :
During measurements in the power supply unit
- Use the primary power unit ground (PGND).

Attention :
Mesure dans le bloc alimentation
- Utiliser la masse du bloc alimentation (PGND).

Achtung :
Bei Messungen im Primärnetzteil
- Primärnetzteilmasse verwenden (PGND).

Attenzione :
misure nell'alimentatore primario
- usare massa alimentazione primario (PGND).

Cuidado :
Medida en el bloque de alimentacion
- Utilizar la masa del bloque de alimentacion (PGND).

Part of board connected to mains supply.
Partie du châssis reliée au secteur.
Primärseite des Netzteils.
Parte dello châssis collegata alla rete.
Parte del chassis conectâr a la red.

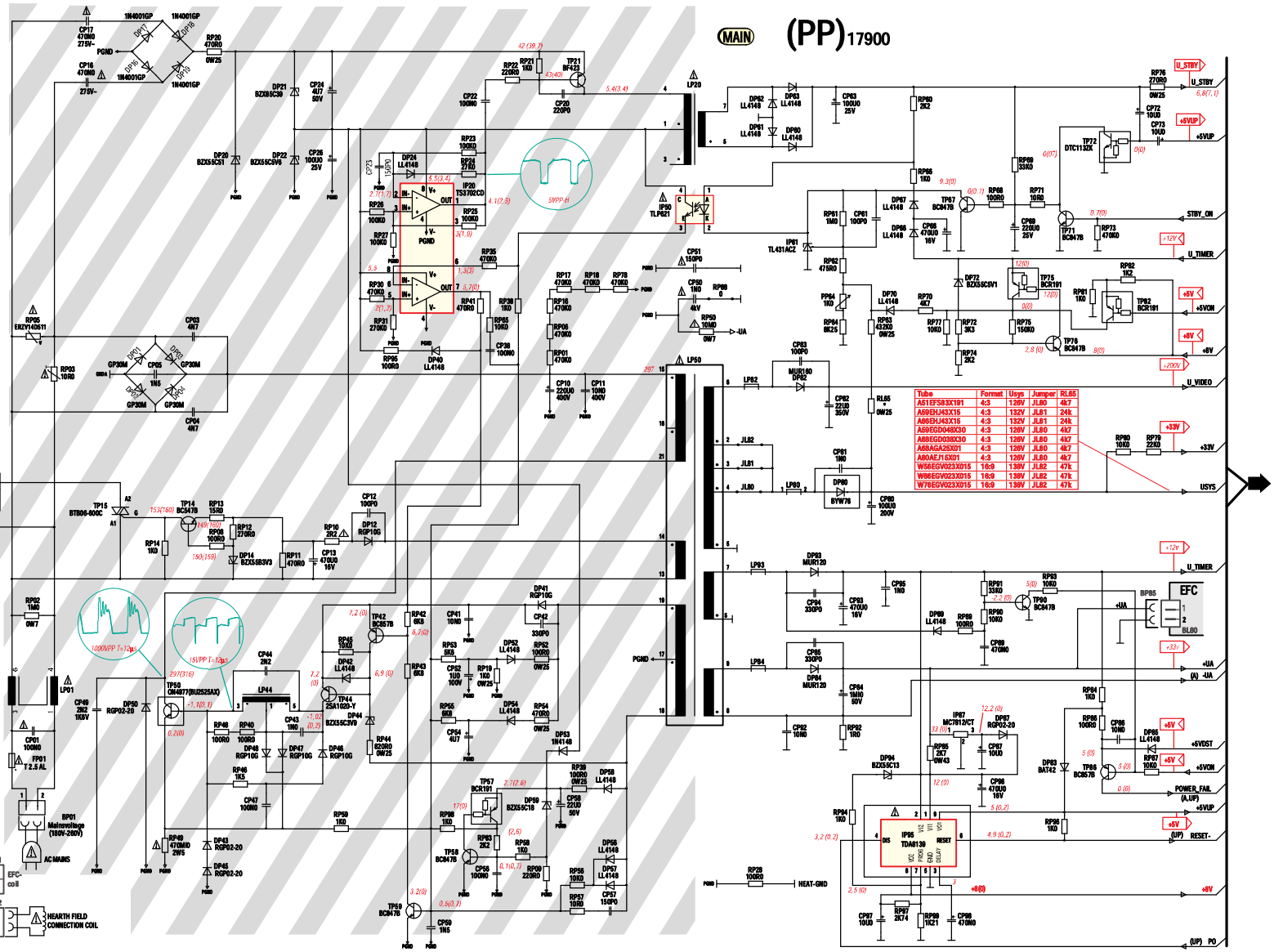

Tube	Format	Usys	Jumper	RL65
A51EF583X191	4:3	126V	JL80	4k7
A59EHJ43X16	4:3	132V	JL81	24k
A66EHJ43X16	4:3	132V	JL81	24k
A59EGD040X30	4:3	126V	JL80	4k7
A68EGD038X30	4:3	126V	JL80	4k7
A68AGA25X01	4:3	126V	JL80	4k7
A90AEJ15X01	4:3	126V	JL80	4k7
W56EGV023X015	16:9	138V	JL82	47k
W66EGV023X015	16:9	138V	JL82	47k
W76EGV023X015	16:9	138V	JL82	47k

⚠ Use isolating mains transformer - Utiliser un transformateur isolateur du secteur -Einen Trenntrafo verwenden
Utilizar un transformador aislador de red - Utilizzare un trasformatore per isolarvi dalla rete

SCANNING - BALAYAGE - ABLENKUNG - BARRIDO - SCANSIONE

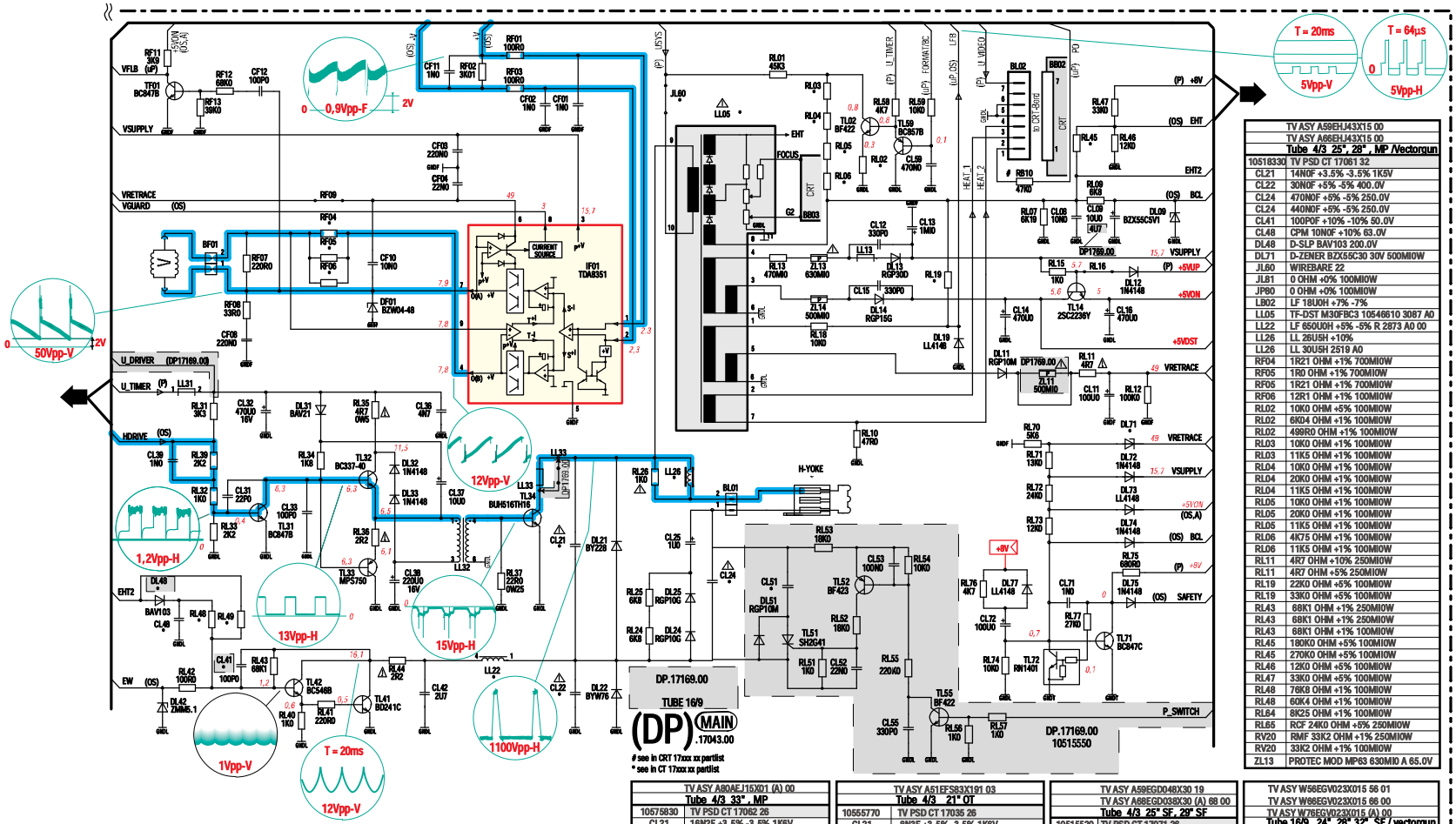

TV ASY A59EHJ43X15 00 TV ASY A66EHJ43X15 00 Tube 4/3 25", 28" , MP /Vectorgun	
10518330	TV PSD CT 17061 32
CL21	14N0F +3.5% -3.5% 1K6V
CL22	30N0F +5% -5% 400.0V
CL24	470N0F +5% -5% 250.0V
CL24	440N0F +5% -5% 250.0V
CL41	100P0F +10% -10% 50.0V
CL48	CPM 10N0F +10% 63.0V
DL48	D-SLP BAV103 200.0V
DL71	D-ZENER BZX55C30 30V 500MI0W
JL60	WIREBARE 22
JL81	0 OHM +0% 100MI0W
JP60	0 OHM +0% 100MI0W
LB02	LF 18U0H +7% -7%
LL05	TF-DST M30FBC3 10546610 3087 A0
LL22	LF 650U0H +5% -5% R 2873 A0 00
LL26	LL 26U5H +10%
LL26	LL 30U5H 2519 A0
RF04	1R21 OHM +1% 700MI0W
RF05	1R0 OHM +1% 700MI0W
RF05	1R21 OHM +1% 700MI0W
RF06	12R1 OHM +1% 100MI0W
RL02	10K0 OHM +5% 100MI0W
RL02	6K04 OHM +1% 100MI0W
RL02	499R0 OHM +1% 100MI0W
RL03	10K0 OHM +1% 100MI0W
RL03	11K5 OHM +1% 100MI0W
RL04	10K0 OHM +1% 100MI0W
RL04	20K0 OHM +1% 100MI0W
RL04	11K5 OHM +1% 100MI0W
RL05	10K0 OHM +1% 100MI0W
RL05	20K0 OHM +1% 100MI0W
RL05	11K5 OHM +1% 100MI0W
RL06	4K75 OHM +1% 100MI0W
RL06	11K5 OHM +1% 100MI0W
RL11	4R7 OHM +10% 250MI0W
RL11	4R7 OHM +5% 250MI0W
RL19	22K0 OHM +5% 100MI0W
RL19	33K0 OHM +5% 100MI0W
RL43	68K1 OHM +1% 250MI0W
RL43	68K1 OHM +1% 250MI0W
RL43	68K1 OHM +1% 100MI0W
RL45	180K0 OHM +5% 100MI0W
RL45	270K0 OHM +5% 100MI0W
RL46	12K0 OHM +5% 100MI0W
RL47	33K0 OHM +5% 100MI0W
RL48	76K8 OHM +1% 100MI0W
RL48	60K4 OHM +1% 100MI0W
RL64	8K25 OHM +1% 100MI0W
RL65	RCF 24K0 OHM +5% 250MI0W
RV20	RMF 33K2 OHM +1% 250MI0W
RV20	33K2 OHM +1% 100MI0W
ZL13	PROTEC MOD MP63 630MI0 A 65.0V

⚠ Indicates critical safety components, and identical components should be used for replacement. Only then can the operational safety be garanteed.

Le remplacement des éléments de sécurité (repérés avec le symbole ⚠) par des composants non homologués selon la Norme CEI 65 entraine la non-conformité de l'appareil.
Dans ce cas, la responsabilité du fabricant n'est plus engagée.

Wenn Sicherheitsteile (mit dem Symbol ⚠ gekennzeichnet) durch nicht normgerechte Teile ersetzt werden, erlischt die Haftung des Herstellers.

La sostituzione degli elementi di sicurezza (contrassegnati con il segno ⚠) con componenti non omologati secondo la norma CEI 65 comporta la non conformitá dell'apparecchio.
In tal caso é "esclusa la responsabilità" del costruttore.

La subtitución de elementos de seguridad (marcados con el simbolo ⚠) por componentes no homologados segun la norma CEI 65, provoca la no conformidad del aparato.
En ese caso, el fabricante cesa de ser responsable.

TV ASY A80AEJ15X01 (A) 00 Tube 4/3 33" , MP	
10575830	TV PSD CT 17062 26
CL21	16N2F +3.5% -3.5% 1K6V
CL22	30N0F +5% -5% 400.0V
CL24	560N0F +5% -5% 250.0V
CL41	100P0F +10% -10% 50.0V
CL48	10N0F +10% 63.0V
DL48	D-SLP BAV103 200.0V
DL71	D-ZENER BZX55C30 30V 500MI0W
JL60	WIREBARE 22
JL80	0 OHM +0% 100MI0W
LB02	LF 32U0H +4% -4%
LL05	TF-DST TDS29 TBD 11
LL22	LF 650U0H +5% -5% R 2873 A0 00
LL26	LL 26U5H +10%
RF05	1R21 OHM +1% 700MI0W
RF06	10R0 OHM +1% 100MI0W
RL02	6K04 OHM +1% 100MI0W
RL03	4K75 OHM +1% 100MI0W
RL04	4K75 OHM +1% 100MI0W
RL05	4K75 OHM +1% 100MI0W
RL06	6K81 OHM +1% 100MI0W
RL19	13K0 OHM +5% 100MI0W
RL45	150K0 OHM +5% 100MI0W
RL48	76K8 OHM +1% 100MI0W
RL49	560K0 OHM +5% 100MI0W
RL65	RCF 4K7 OHM +5% 250MI0W
RV20	RMF 23K7 OHM +1% 250MI0W

TV ASY A51FS83X191 03 Tube 4/3 21" OT	
10555770	TV PSD CT 17035 26
CL21	8N3F +3.5% -3.5% 1K6V
CL22	33N0F +5% -5% 1K0V
CL24	440N0F +5% -5% 250.0V
CL41	1N0F +10% -10% 50.0V
DL71	D-ZENER BZX55C24 24V 500MI0W
JL60	WIREBARE 22
JL80	0 OHM +0% 100MI0W
LB02	LF 18U0H +7% -7%
LL05	TF-DST M30FBC3 10555640 3087 A0
LL22	LF 650U0H +5% -5% R 2873 A0 00
LL26	LL 85U0H 2519 A0
RF05	1R5 OHM +1% 700MI0W
RF06	10R0 OHM +1% 100MI0W
RL02	6K04 OHM +1% 100MI0W
RL03	10K0 OHM +1% 100MI0W
RL04	10K0 OHM +1% 100MI0W
RL05	10K0 OHM +1% 100MI0W
RL06	3K32 OHM +1% 100MI0W
RL45	110K0 OHM +5% 100MI0W
RL49	60K4 OHM +1% 100MI0W
RL65	4K7 OHM +5% 250MI0W
RV20	23K7 OHM +1% 250MI0W

TV ASY A59EGD048X30 19 TV ASY A68EGD038X30 (A) 68 00 Tube 4/3 25" SF, 29" SF	
10515520	TV PSD CT 17071 26
CL21	16N2F +3.5% -3.5% 1K6V
CL22	30N0F +5% -5% 400.0V
CL24	510N0F +5% -5% 250.0V
CL41	100P0F +10% -10% 50.0V
CL48	10N0F +10% 63.0V
DL48	D-SLP BAV103 200.0V
DL71	D-ZENER BZX55C30 30V 500MI0W
JL60	WIREBARE 22
JL80	0 OHM +0% 100MI0W
LB02	LF 32U0H +4% -4%
LL05	TF-DST TDS29 TBD 13
LL22	LF 650U0H +5% -5%
LL26	LL 26U5H +10%
RF05	RMF 1R0 OHM +1% 700MI0W
RL02	6K8 OHM +5% 100MI0W
RL03	4K75 OHM +1% 100MI0W
RL04	4K75 OHM +1% 100MI0W
RL05	4K75 OHM +1% 100MI0W
RL06	4K75 OHM +1% 100MI0W
RL19	15K0 OHM +5% 100MI0W
RL45	180K0 OHM +5% 100MI0W
RL48	100K0 OHM +5% 100MI0W
RL49	300K0 OHM +5% 100MI0W
RL65	4K7 OHM +5% 250MI0W
RV20	33K2 OHM +1% 250MI0W

TV ASY W56EGV023X015 56 01 TV ASY W66EGV023X015 66 00 TV ASY W78EGV023X015 (A) 00 Tube 16/9 24", 28", 32", SF / vectorgun	
10515530	TV PSD CT 17083 38
CL21	15N5F +3.5% -3.5% 1K6V
CL22	27N0F +5% -5% 400.0V
CL24	440N0F +5% -5% 250.0V
CL41	100P0F +10% -10% 50.0V
CL48	100N0F +5% 63.0V
CL51	290N0F +5% -5% 250.0V
DL48	D-SLP BAV103 200.0V
DL71	D-ZENER BZX55C24 24V 500MI0W
JL60	WIREBARE 22
JL82	0 OHM +0% 100MI0W
LB02	LF 32U0H +4% -4%
LL05	TF-DST TDS29 15314460 10
LL22	LF 650U0H +5% -5%
LL26	LL 30U5H 2519 A0
RF05	1R21 OHM +1% 700MI0W
RL02	4K99 OHM +1% 100MI0W
RL03	6K49 OHM +1% 100MI0W
RL04	6K49 OHM +1% 100MI0W
RL05	6K49 OHM +1% 100MI0W
RL06	2K37 OHM +1% 100MI0W
RL19	13K0 OHM +5% 100MI0W
RL45	390K0 OHM +5% 100MI0W
RL48	220K0 OHM +5% 100MI0W
RL49	180K0 OHM +5% 100MI0W
RL65	47K0 OHM +5% 250MI0W
RV20	100K0 OHM +1% 250MI0W

CONTROL MICROPROCESSOR - MICROPROCESSEUR DE COMMANDE - MIKROPROZESSOR - MICROPROCESSORE DEI COMANDI - MICROPROCESADOR DE LOS MANDOS

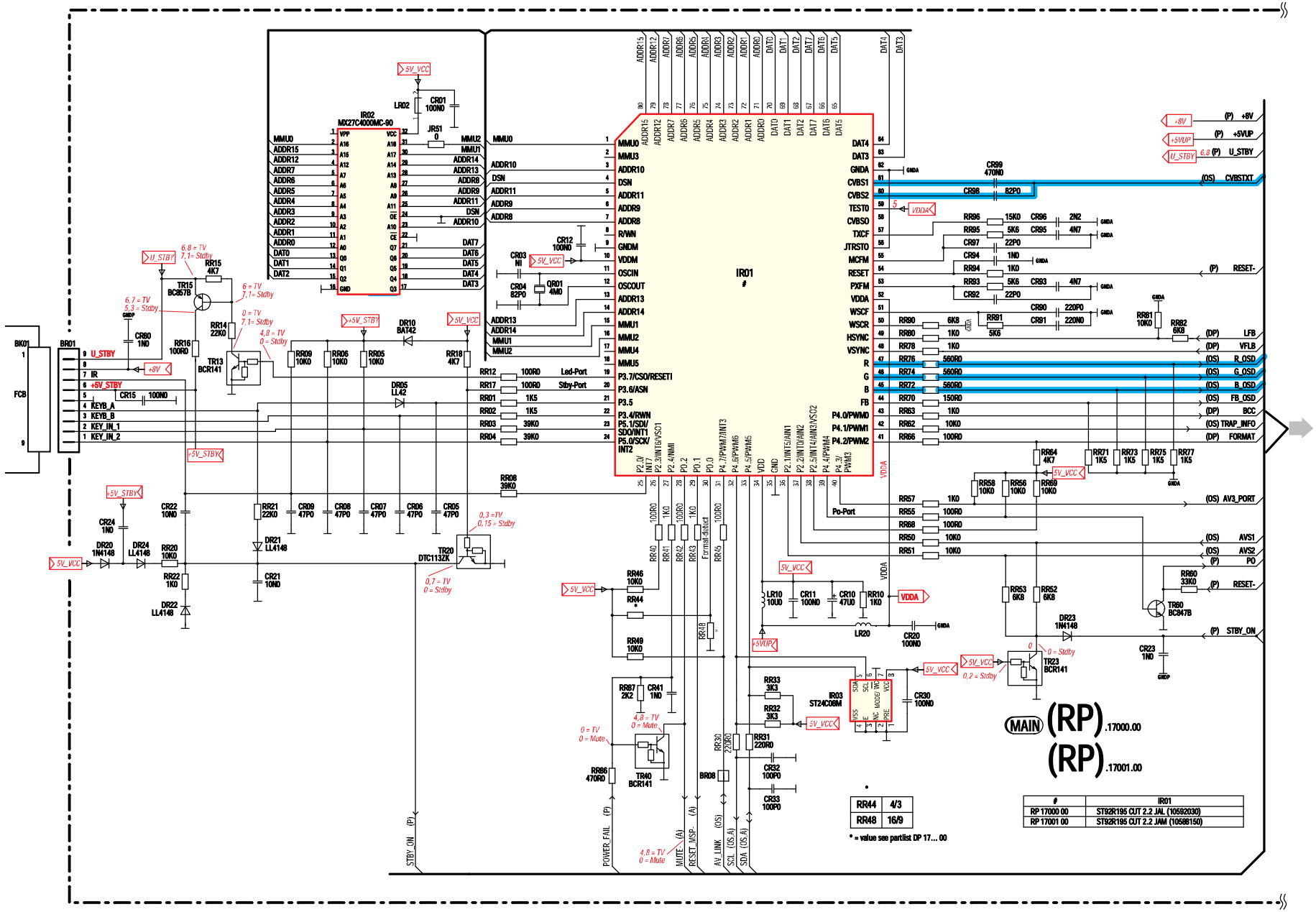

RF/FI/ SCART INTERFACE/VIDEO SIGNAL PROCESSING -HF/FI INTERFACE PERITELEVISION/TRAITEMENT LUMINANCE CHROMINANCE - HF/ZF/ SCART INTERFACE/VIDEO SIGNALVERARBEITUNG - RF/FI /PRESA PERITEL/ELABORAZIONE VIDEO - RF/FI /EUROCONECTOR / TRATAMENTO VIDEO

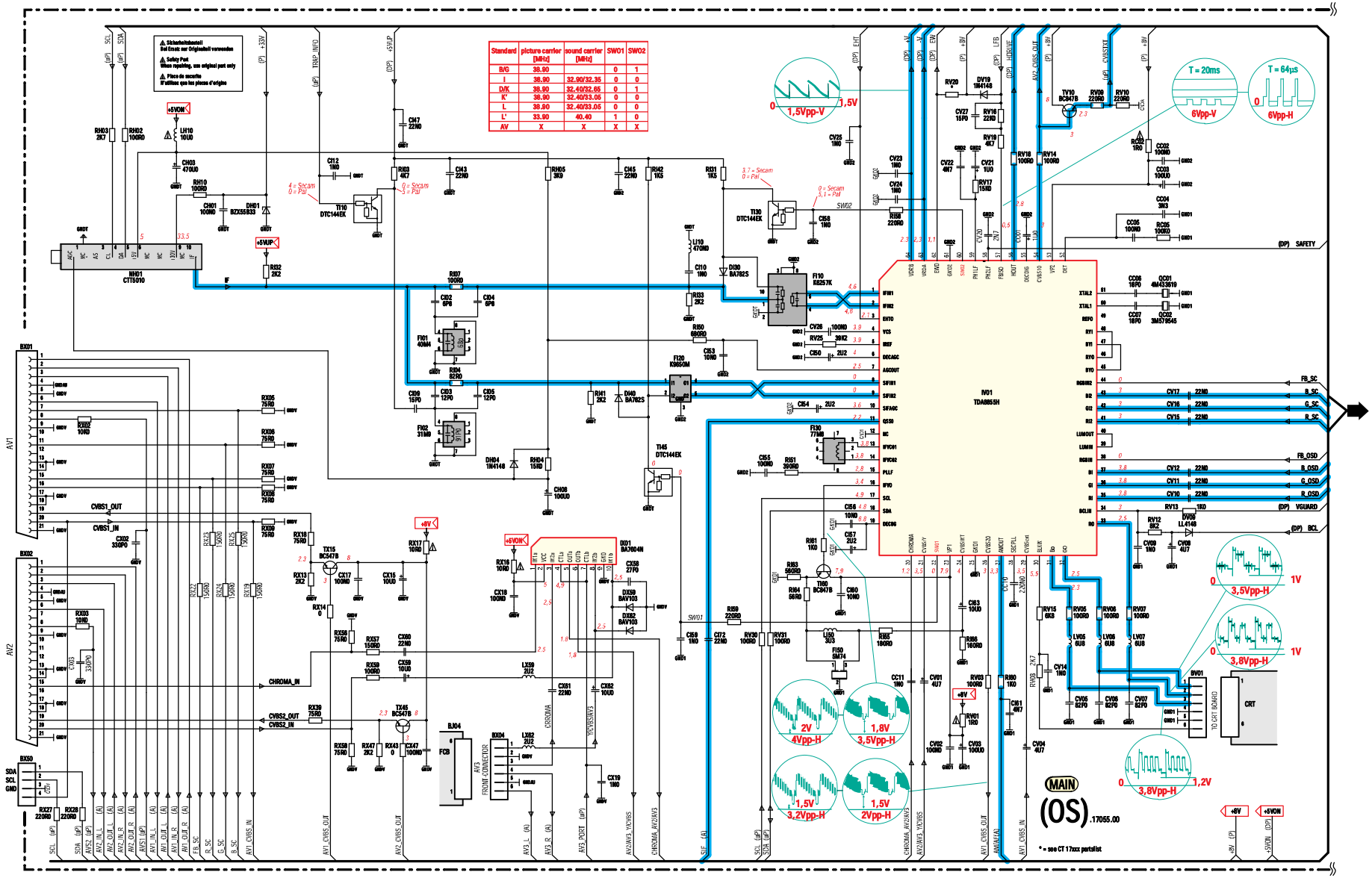

RF/FI/ SCART INTERFACE/VIDEO SIGNAL PROCESSING -HF/FI INTERFACE PERITELEVISION/TRAITEMENT LUMINANCE CHROMINANCE - HF/ZF/ SCART INTERFACE/VIDEO SIGNALVERARBEITUNG - RF/FI /PRESA PERITEL/ELABORAZIONE VIDEO - RF/FI /EUROCONECTOR/TRATAMENTO VIDEO

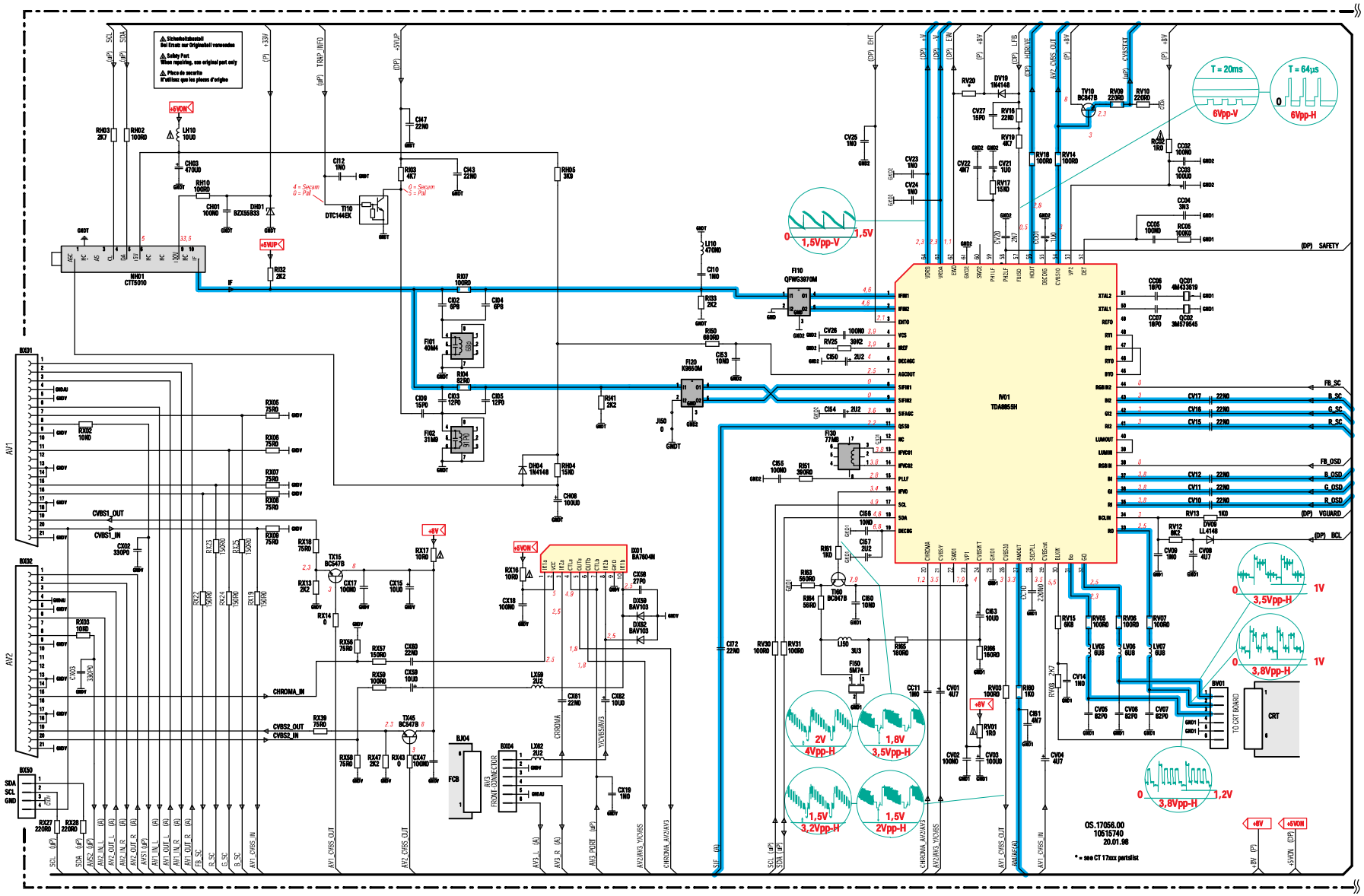

AMPLIFIER SCHEMATIC DIAGRAM - SCHEMA DE L'AMPLIFICATEUR - SCHALTBILD AUDIO-SIGNALVERABEITUNG - SCHEMA DELL' AMPLIFICATORE ESQUEMA DEL AMPLIFICADOR
(STEREO)

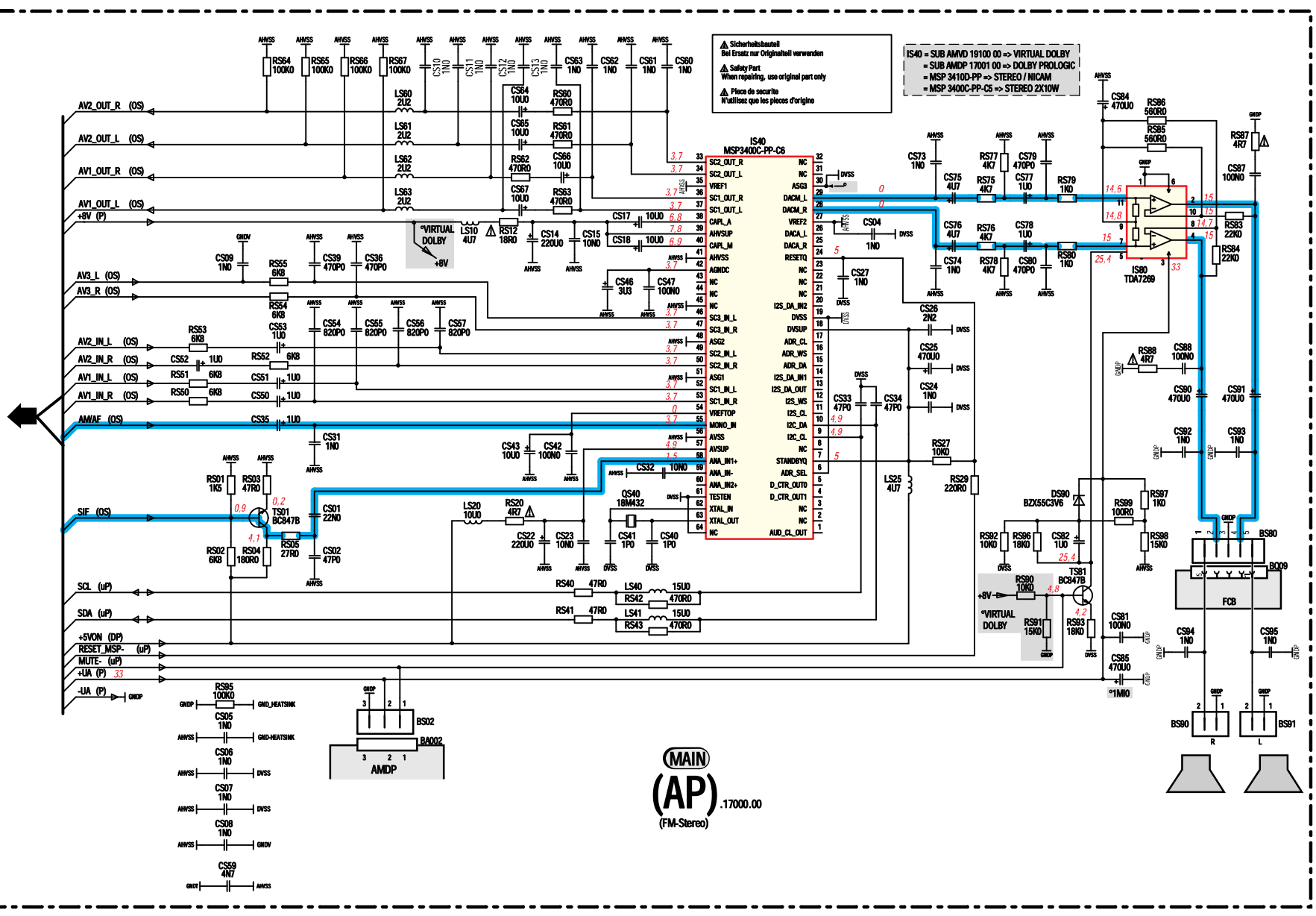

AMPLIFIER SCHEMATIC DIAGRAM - SCHEMA DE L'AMPLIFICATEUR - SCHALTBILD AUDIO-SIGNALVERABEITUNG - SCHEMA DELL' AMPLIFICATORE - ESQUEMA DEL AMPLIFICADOR
(MONO)

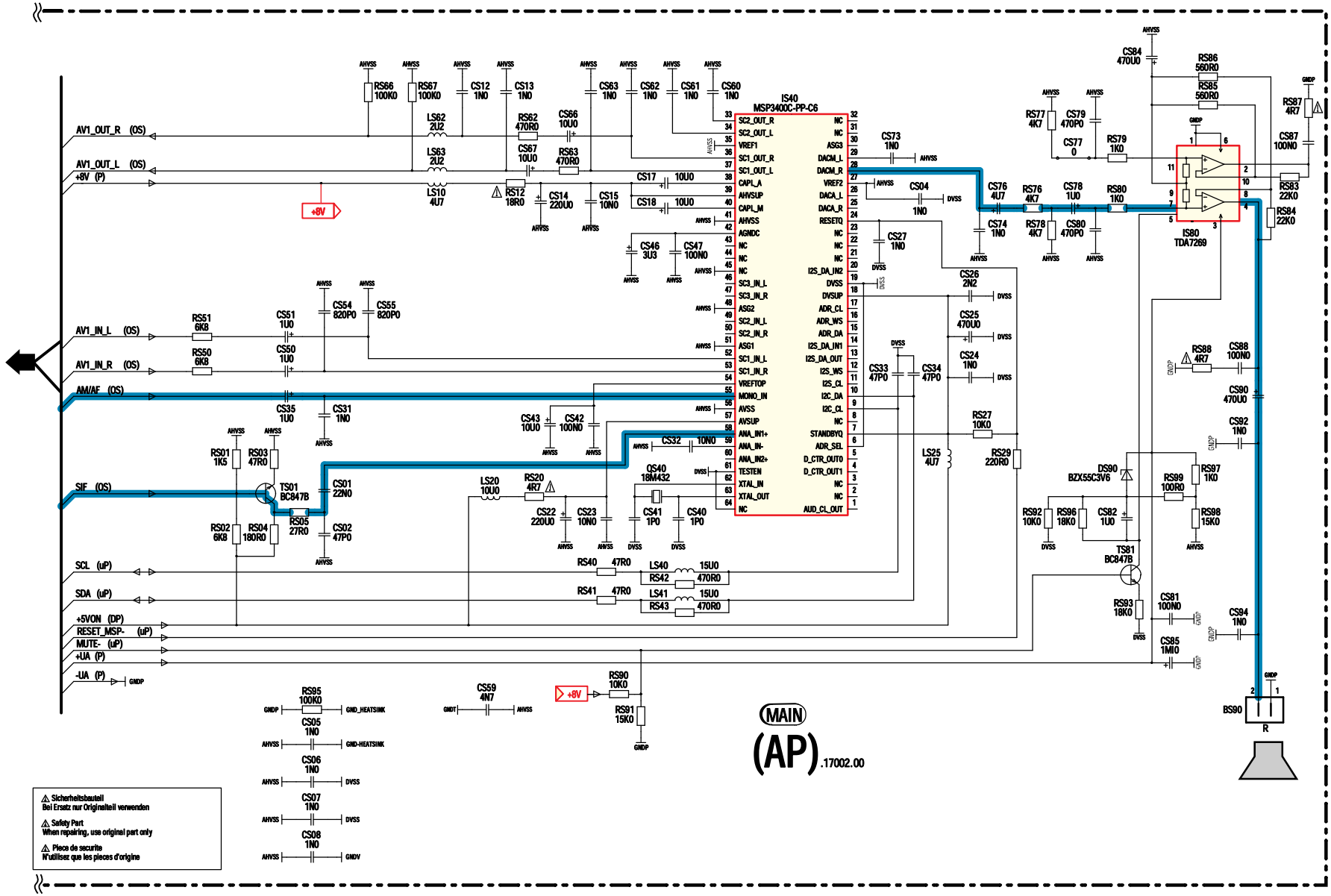

KEY BOARD AND FRONT CONNECTOR BOARD
MODULE PRISE EN FACADE ET INTERCONNEXION DU CLAVIER
TASTATUR UND FRONT ANSCHLUSSPLATTE - PIASTRA CONNESSIONE
PLACA TECLADO Y CONECTORES FRONTALES

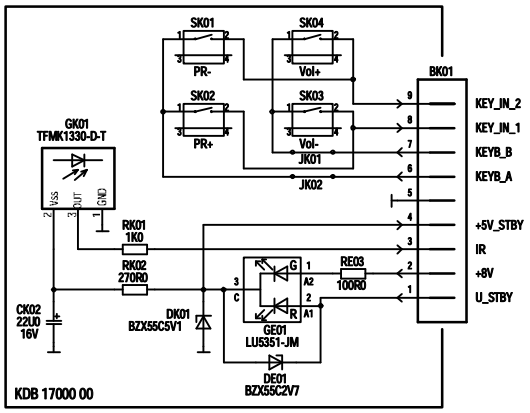

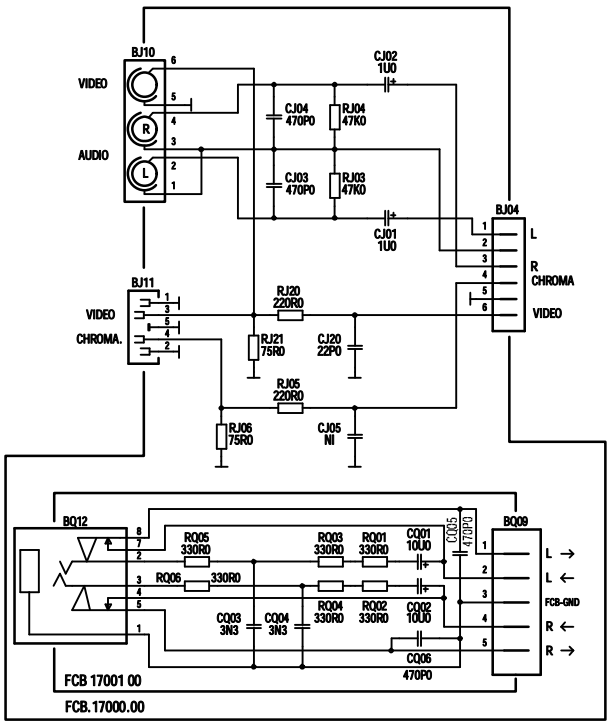

VIDEO AMPLIFIER BOARD - PLATINE AMPLIFICATEURS VIDEO - VIDEOVERSTÄRKERPLATTE - PIASTRA AMPLIFICATORE VIDEO - PLATINA AMPLIFICADOR VIDEO

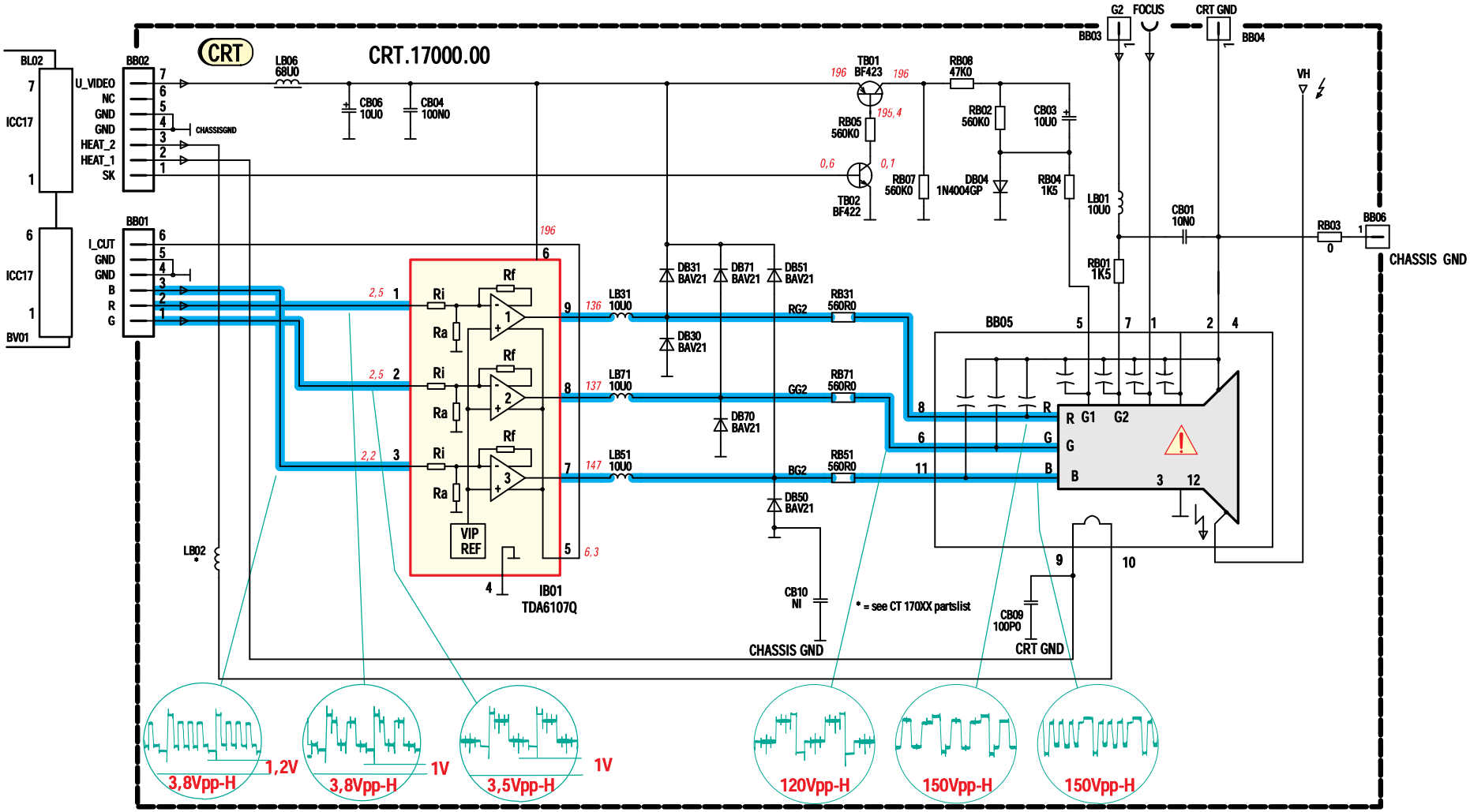

THOMSON MULTI MEDIA

TV

Brandt FERGUSON **NORDMENDE** SABA **TELEFUNKEN** **THOMSON**

PARTS LIST
LISTE PIECES DETACHEES
ERSATZTEILLISTE
LISTA PARTI DI RICAMBIO
LISTA DE PIEZAS DE REPUESTO

THOMSON
28WS23U
Chassis ICC17

MODULES

MAIN	**IC17F5RQ056070**	
EFC	**EFC17000**	**10601380**
FCB	**FCB1703**	**25317800**
KB	**KB1701**	**25317560**
RIR	**IR1700**	**25317570**

GK01	TMFT1330T	10132400
IB01	TDA6107Q	10533940
IF01	TDA8351	20753830
IP20	TS3702CD FLAT	10537330
IP61	TL431ACZ	10538830
IP87	MC7812/CT	46007600
IP95	TDA8139	10044580
IR01	ST92R195 CUT 2.2 FLAT	10588150
IR02	MX27C4000MC-90	10593840
IR03	M24C08MN FLAT	10564350
IS80	TDA7269	10348790
IS100	MSP8410D-B4 (DIE)	10546420
IS200	DPL3519 (DIE)	10546430
IV01	TDA8855H FLAT	10533960
IX01	BA7604N	10539590
ZL11	MP40	⚠ 10469170
ZL13	MP63	⚠ 10472270
ZL14	MP50	⚠ 10457120

IP50	TLP621 GR(D4-LF2 T)	⚠ 20827900
TB01,**TL**52, **TP**21	BF423	16003110
TB02,**TL**02,55	BF422	16003090
TF01,**TI**60, **TL**31,**TP**58,59, 67,71,76,90, **TR**60,**TS**01,81, **TV**10	BC847B SMD	11070770
TI10,30,45	DTC144EK SMD	16007030
TL14	2SC2236Y	16000220
TL32,80,82	BC337-40	45001466
TL33	MPS750	16001340
TL34,**TP**50	BUH516TH16	10401110
TL41	BD241C	16001880
TL42	BC546B	45001866
TL51	SH2G41	48061500
TL59,**TP**42,86, **TR**15	BC857B SMD	30946660
TL71	BC847C SMD	90618810
TL72	RN1401 SMD	10966100
TL81,83	BC327-40	16000450
TP14,**TX**15,45	BC547B	16000890
TP15	BTB06-600C	10259910
TP44	2SA1020Y	16003740
TP57,75,82	BCR191 SMD	16006910
TP72,**TR**20	DTC113ZK SMD	10550750
TR13,23,40	BCR141 SMD	16006890

DB04	1N4004	44009009
DB05	1.5KE250A	25353360
DB30,31,50,51, 70,71,**DJ**20, **DL**31	BAV21	44044407
DE01	BZX55C2V7	80444120
DF01	BZW04-48	10351880
DH01	BZX55B33	80442730
DH04,**DL**12,32, 33,72,74,75, 82,83,**DP**53, **DR**20,23,**DV**19	1N4148	44009209
DI30,40	BA782S	20542050
DK01,**DL**09, **DP**72	BZX55C5V1/ZPD5V1	80444140
DL11,51	RGP10M	10455320
DL13	RGP30D	10455370
DL14	RGP15G	10272800
DL19,73,77, **DP**24,40,42,52, 54,56,57,58, 60,61,62,63, 67,70,85,89, **DR**21,22,24, **DV**09	LL4148 SMD	16012450
DL21	BY228	10406470
DL22	BYW76	16009120
DL24,25,**DP**12, 41,46,47,48	RGP10G	10459090
DL42	ZMM5,1 SMD	70446740
DL48,**DX**59	BAV103 SMD	10155030
DL71	ZPD24	44016504
DL80	BZX55C27	60447870
DL81	BZX55C15	20475420
DP01,02,03,04	BYW27-1000	10455390
DP14	BZX55C3V3	30948790
DP16,17,18,19	1N4001	16008160
DP20	ZPD51/BZX55C51/BZX79C51	90578110
DP21	BZX85C39	80444000
DP22	BZX55C5V6/ZPD5V6	44025401
DP43,45,50,87	RGP02-20	10472330
DP44	BZX55C3V9	80444130
DP59	BZX55C18	11073680
DP80	FUF5406	25353980
DP82	FUF4005	16009580
DP83	BAT42	16007410
DP84,93	MUR120	10564670
DP94	BZX55C13	70438310
DR05	LL42 SMD	16012530
DS90	BZX55C3V6	50890640
GE01	TLUV5300 LED	11137650

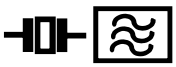

FI10	OFWK6257K FOS	10545030
FI20	OFWK9650M FOS	10545440
FI50	5M74HZ	20338170
QC01	4M433619HZ	10087710
QC02	3M579545HZ	10542190
QS40	18M432HZ	10334670

FI01	40M4HZ	20300950
FI02	31M9HZ	10552630
FI30	77M8HZ	10559760

PL80	47K0 OHM	42006100
PP64	1K0 OHM	70434550

R : RECYCLED PART
: PIECE RECYCLEE
: AUSTAUSCHTEILE
: RICAMBIO RICICLATO
: MODULO REPROCESADO

For any requests, please contact THOMSON multimedia after sales service area
Pour toutes précisions, contactez votre service apres vente local THOMSON multimedia
Für weitere Auskünfte, wenden Sie sich bitte an die THOMSON multimedia Kundendienste
Per precisazioni, contattare l'assistenza tecnica THOMSON multimedia
Para cualquier pregunta, por favor contactar con el responsable de zona del servicio postventa de THOMSON multimedia

08 / 98 **35068700**
REV. N° 0 00 / 00 **00000000**

No copying, translation, modification on other use authorized. All rights reserved worldwide. • Tous droits de reproduction, de traduction, d'adaptation et d'exécution réservés pour tous les pays. • Sämtliche Urheberrechte an diesen Texten und Zeichnungen Vervielfältigungen - auch auszugsweise - nur mit unserer vorherigen Zustimmung zulässig. Alle Rechte vorbehalten. • I diritti di riproduzione, di traduzione, e esecuzione sono riservati per tutti i paesi. • Derechos de reproduccion, de traduccion, de adap

RB01,04	1K5 OHM 5% 0,50W		10121880
RB06	220R0 OHM 5% 0,25W	⚠	15009810
RB13	10R0 OHM 10% 0,50W		15000160
RB31,51,71	560R0 OHM 10% 0,50W		10257590
RC02,**RV**01	1R0 OHM 5% 0,40W	⚠	13060910
RF05	1R21 OHM 1% 0,70W		13010820
RF07	220R0 OHM 1% 0,70W		10233720
RF08	33R0 OHM 10% 0,25W	⚠	13062810
RL01	45K3 OHM 1% 0,25W		15018160
RL07	6K19 OHM 1% 0,40W		15020490
RL13	0R47 OHM 5% 2,5W		10537750
RL26	1K0 OHM 10% 0,50W		10393870
RL35	4R7 OHM 5% 0,35W	⚠	10226310
RL36,**RP**10	2R2 OHM 5% 0,25W	⚠	15009870
RL43	68K1 OHM 1% 0,70W		10147740
RL44	1R0 OHM 5% 0,50W	⚠	10576360
RL80	22R0 OHM 5% 0,25W	⚠	35031220
RP04	2R7 OHM 5% 4,50W		10379110
RP15	18R0 OHM 220V PTC	⚠	41398800
RP49	0R47 OHM 5% 2,5W	⚠	25339900
RP50	10M0 OHM 5% 0,70W	⚠	10074320
RP63	432K0 OHM 1% 0,25W		15017950
RS12	18R0 OHM 5% 0,30W	⚠	15009660
RS20,87,88	4R7 OHM 5% 0,25W	⚠	35032200
RV20	100K0 OHM 1% 0,25W		50883810
RX17	10R0 OHM 5% 0,25W	⚠	15009580

CB01	10N0F 3K0V		14036450
CL08	10N0F 5% 400V		14035870
CL12,15,55, **CP**18,21,42,85, 94	330P0F 20% 1K0V		14035270
CL22	27N0F 5% 400V		10349170
CP01	100N0F 20% 275V	⚠	10331520
CP03,04	4N7F 1K0V		10058740
CP05	1N5F 10% 1K0V		20338740
CP10	150U0F 385V		43424800
CP11	10N0F 10% 400V		15001080
CP16,17	220N0F 20% 275V	⚠	30745000
CP20	220P0F 10% 400V		14033000
CP49	1N5F 10% 1K6V		10590570
CP50	1N0F 20% 400V	⚠	43106800
CP51	150P0F 20% 400V	⚠	20298500
CP81	1N0F 10% 500V		10546570

LL05	DSTTDS29	⚠	10500980
LL26		⚠	50873254
LL32	DRIVER		10518110
LP01		⚠	10261530
LP20	DRIVER	⚠	10554410
LP44	DRIVER		10561800
LP50	SMT41	⚠	10537860

OTHER PARTS
AUTRES PIECES
SONSTIGE TEILE
ALTRE PARTI
OTRAS PIEZAS

BB05	CATHODE RAY TUBE SOCKET SUPPORT TUBE CATHODIQUE BILDROEHRENFASSUNG SUPPORTO TUBO CATODICO SOPORTE T.R.C	⚠	80298800
BJ10	CINCH SOCKET ASSY PLAQUETTE PRISES CINCH CHINCH BUCHSEN-EINHEIT ASSIEME PRESA CINCH PLAQUETA TOMA CINCH		10487650
BJ11	SVHS SOCKET PRISE SVHS S-VHS-BUCHSE PRESA SVHS TOMA SVHS		20392900
BQ12	HEADPHONE SOCKET PRISE CASQUE KOPFHOERERBUCHSE PRESA JACK TOMA JACK		10002260
BX01,02	SCART SOCKET PRISE PERITEL EURO-AV-BUCHSE EUROPRESA NORMALIZZATA EUROCONECTOR		90617260
CH200	ON/OFF SWITCH CONTACTEUR MARCHE/ARRET EIN-AUS SCHALTER CONTATTORE ACCESO/SPENTO CONTACTOR MARCHA/PARADA	⚠	10276500
FP01	2A5T TIME-LAG FUSE 2A5T FUSIBLE TEMPORISE 2A5T SICHERUNG 2A5T FUSIBILE TEMPORIZZATO 2A5T FUSIBLE TEMPORIZADO	⚠	10246750
NH01	CTT5010 UHF/VHF TUNER CTT5010 TETE UHF/VHF CTT5010 UHF/VHF TUNER CTT5010 TUNER UHF/VHF CTT5010 SINTONIZADOR UHF/VHF	R	20812280
SM01,02,03,04	MICROSWITCH MICRO CONTACTEUR MIKROSCHALTER MICROINTERRUTTORE MICROCONTACTOR		20540300

EQUIPMENT/PRESENTATION
EQUIPEMENT/PRESENTATION
AUSSTATTUNG/GEHAEUSE
PARTI VARIE
EQUIPO/PRESENTACION

FRONT PANEL FACADE FRONTPLATTE PANNELLO FRONTALE PANEL FRONTAL		25290990
REAR PANEL DOS RUECKWAND PANNELLO POSTERIORE TAPA POSTERIOR	⚠	25350060
LOGO THOMSON LOGO THOMSON SCHRIFTZUG THOMSON MARCHIO THOMSON LOGOTIPO THOMSON		25314150
LOUDSPEAKER GRID LEFT/RIGHT GRILLE HAUT PARLEUR GAUCHE/DROIT LAUTSPRECHERGITTER LINKS/RECHTS GRIGLIA ALTOPARLANTE SINISTRO/DESTRO REJILLA ALTAVOZ IZQUIERDA/DERECHA		25296680
16R OHM 8W LOUDSPEAKER 80X160 16R OHM 8W HAUT PARLEUR 80X160 16R OHM 8W LAUTSPRECHER 80X160 16R OHM 8W ALTOPARLANTE 80X160 16R OHM 8W ALTAVOZ 80X160		10495890
16R OHM 7W LOUDSPEAKER 41X71 16R OHM 7W HAUT PARLEUR 41X71 16R OHM 7W LAUTSPRECHER 41X71 16R OHM 7W ALTOPARLANTE 41X71 16R OHM 7W ALTAVOZ 41X71		25360270
ON/OFF BUTTON TOUCHE MARCHE/ARRET EIN-AUS TASTE TASTO ACCESSO/SPENTO TECLA MARCHA/PARADA		25253290
BUTTON STRIP BARRETTE DE TOUCHES TASTENLEISTE PIATTINA TASTI PLACA DE TECLAS		25331420
POWER SUPPLY LEAD (UK) CORDON D'ALIMENTATION (UK) NETZKABEL (UK) CAVO DI ALIMENTAZIONE (UK) CABLE DE ALIMENTACION (UK)	⚠	10265730
W66EGV023X015 CATHODE RAY TUBE W66EGV023X015 TUBE CATHODIQUE W66EGV023X015 FARBBILDROEHRE W66EGV023X015 TUBO CATODICO W66EGV023X015 T.R.C	⚠	10347840
DEGAUSSING COIL BOBINE DE DEMAGNETISATION ENTMAGNETISIERUNGSSPULE BOBINA DI SMAGNETIZZAZIONE BOBINA DE DESIMANTACION	⚠	47320157
RCT4100 REMOTE CONTROL RCT4100 TELECOMMANDE RCT4100 FERNBEDIENUNG RCT4100 TELECOMANDO RCT4100 TELEMANDO		10525970
FOLDING BOX EMBALLAGE CARTON KARTON IMBALLAGGIO CARTONE EMBALAJE CARTON		25298840
FITTING DOWNER CALE INFERIEURE POLSTER UNTEN DISTANZIATORE INFERIORE CALZO INFERIOR		25260890
FITTING UPPER CALE SUPERIEURE POLSTER OBEN DISTANZIATORE SUPERIORE CALZO SUPERIOR		25303960

INSTRUCTIONS
NOTICES
ANLEITUNGEN
ISTRUZIONI
MANUALE

28WS23U PARTS LIST 28WS23U LISTE DE PIECES DETACHEES 28WS23U ERSATZTEILLISTE 28WS23U LISTA PARTI DI RICAMBIO 28WS23U LISTA DE PIEZAS DE REPUESTO	35068700
ICC17 SERVICE MANUEL EUROPE ICC17 DOC TECHNIQUE EUROPE ICC17 TECHNISCHE DOKUMENTATION EUROPE ICC17 DOCUMENTAZIONE TECNICA EUROPE ICC17 DOCUMENTACION TECNICA EUROPE	35063330
28WS23U UM THOMSON GB 28WS23U NU THOMSON GB 28WS23U BA THOMSON GB 28WS23U IU THOMSON GB 28WS23U IU THOMSON GB	25340570

The description and characteristics given here are of informative significance only, and non committal. To keep up the high quality of our products, we reserve the right to make any changes or improvement without previous notice. • Les descriptions et caractéristiques figurant sur ce document sont données à titre d'information et non d'engagement. En effet, soucieux de la qualité de nos produits, nous nous réservons le droit d'effectuer, sans préavis, toute modification ou amélioration. • Die Beschreibungen und Daten in dieser Anleitung dienen nur zur Information und sind nicht bindend. Um die Qualität unserer Produkte ständig zu verbessern, behalten wir uns das Recht auf Änderungen vor. • Le descrizioni e le caratteristiche date su questo documento sono fornite a semplice titolo informativo e senza impegno. Ci riserviamo il diritto di eseguire, senza preavviso, qualsiasi modifica o miglioramento. • Las descripciones y características que figuran en este documento se dan a título de información y no de compromiso. En efecto, en bien de la calidad de nuestros productos, nos reservamos el derecho de efectuar, sin previo aviso, cualquier modificación o mejora.

THOMSON multimedia S.A au capital de 12375616000 FF - 46, Quai Alphonse Le Gallo 92648 Boulogne Cedex FRANCE - RCS NANTERRE B 333 773 174